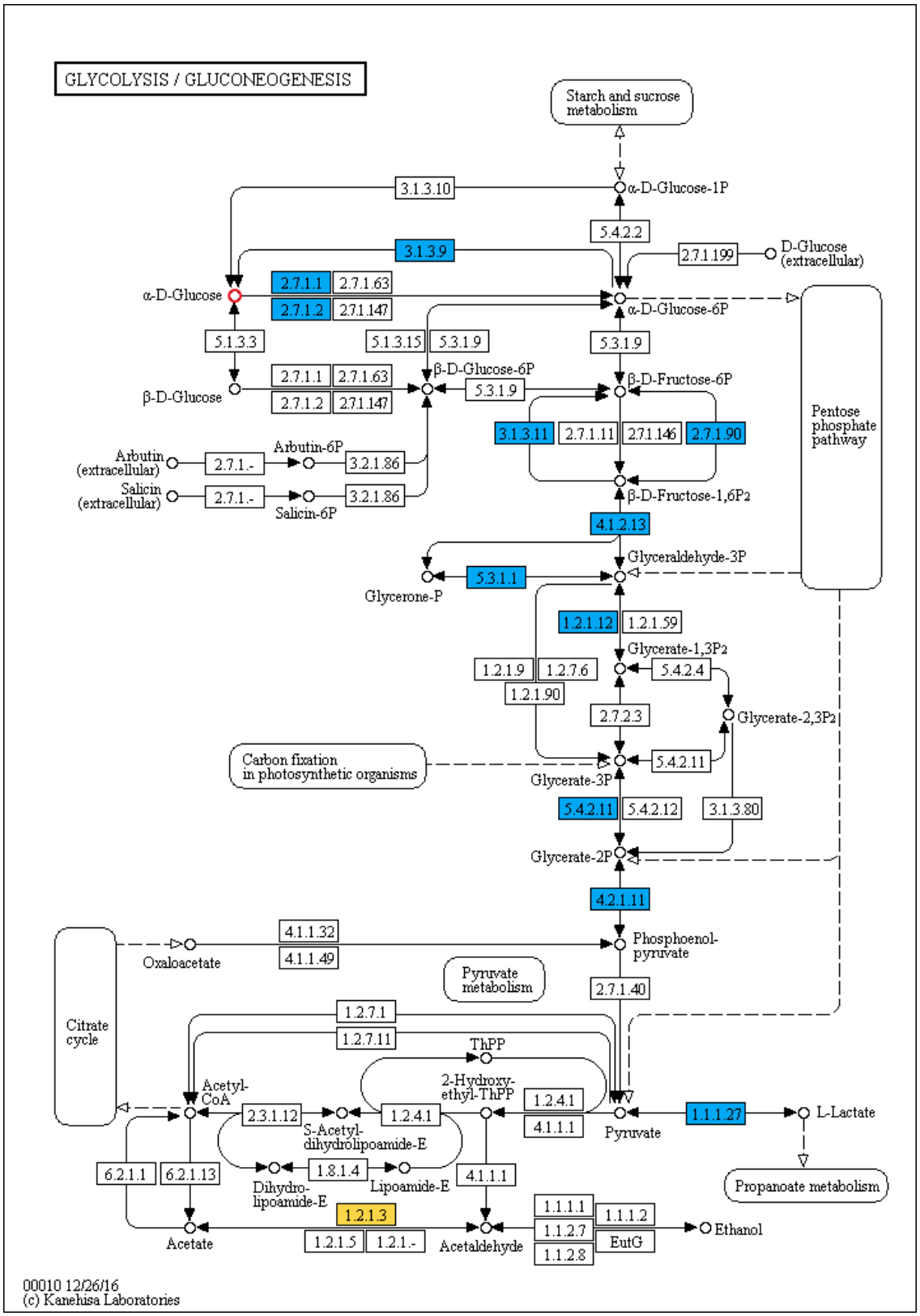
GLYCOLYSIS / GLUCONEOGENESIS
Starch and sucrose metabolism
α-D-Glucose-1P
3.1.3.10
5.4.2.2
3.1.3.9
2.7.1.199
D-Glucose (extracellular)
α-D-Glucose
2.7.1.1
2.7.1.63
2.7.1.2
2.7.1.147
α-D-Glucose-6P
5.1.3.3
5.1.3.15
5.3.1.9
5.3.1.9
β-D-Glucose-6P
β-D-Glucose
β-D-Fructose-6P
Pentose phosphate pathway
3.1.3.11
2.7.1.11
2.7.1.146
2.7.1.90
Arbutin (extracellular)
2.7.1.-
Arbutin-6P
3.2.1.86
Salicin (extracellular)
Salicin-6P
β-D-Fructose-1,6P2
4.1.2.13
Glyceraldehyde-3P
5.3.1.1
Glycerone-P
1.2.1.12
1.2.1.59
Glycerate-1,3P2
1.2.1.9
1.2.7.6
1.2.1.90
5.4.2.4
2.7.2.3
Glycerate-2,3P2
Carbon fixation in photosynthetic organisms
5.4.2.11
Glycerate-3P
5.4.2.11
5.4.2.12
3.1.3.80
Glycerate-2P
4.2.1.11
Phosphoenol-pyruvate
4.1.1.32
4.1.1.49
Oxaloacetate
Pyruvate metabolism
2.7.1.40
Citrate cycle
1.2.7.1
1.2.7.11
ThPP
Acetyl-CoA
2-Hydroxy-ethyl-ThPP
2.3.1.12
1.2.4.1
S-Acetyl-dihydrolipoamide-E
1.2.4.1
4.1.1.1
Pyruvate
1.1.1.27
L-Lactate
6.2.1.1
6.2.1.13
1.8.1.4
Dihydro-lipoamide-E
Lipoamide-E
4.1.1.1
Propanoate metabolism
1.2.1.3
1.1.1.1
1.1.1.2
1.1.2.7
EutG
1.1.2.8
Ethanol
Acetate
1.2.1.5
1.2.1.-
Acetaldehyde
00010 12/26/16
(c) Kanehisa Laboratories