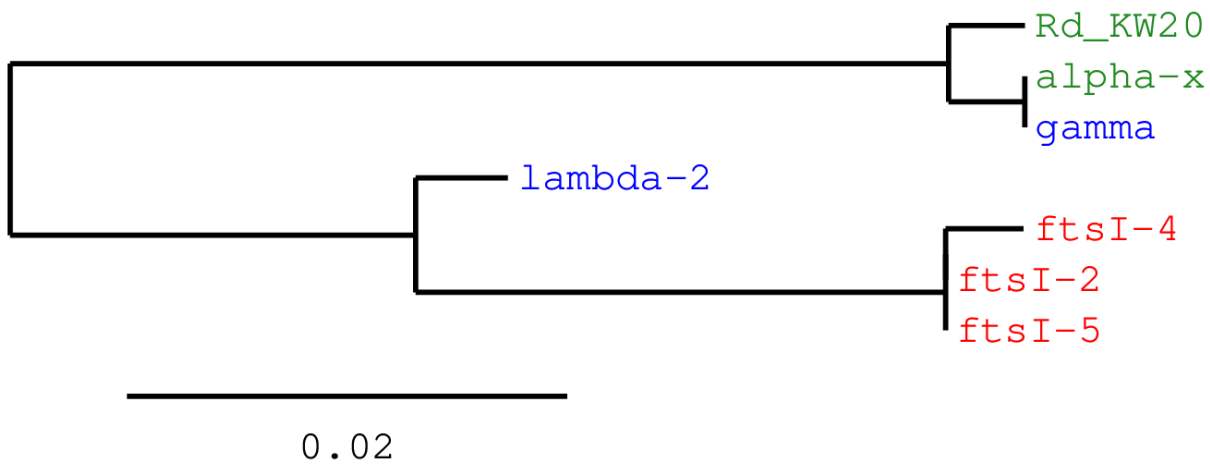
Rd_KW20
alpha-x
gamma
lambda-2
ftsI-4
ftsI-2
ftsI-5
0.02