Supplemental Table 1 Targeted genes

Gene			Gene		
1	COL4A3	All exons and introns	15	LAMB2	All exons
2	COL4A4	All exons and introns	16	SCARB2	All exons
3	COL4A5	All exons and introns	17	INF2	All exons
4	MYH9	All exons	18	ARHGAP24	All exons
5	GLA	All exons and introns	19	ANLN	All exons
6	CD2AP	All exons	20	COQ6	All exons
7	WT1	All exons	21	ITGA3	All exons
8	ACTN4	All exons	22	GLEPP1	All exons
9	LMX1B	All exons	23	MYO1E	All exons
10	NPHS1	All exons	24	ARHGDIA	All exons
11	NPHS2	All exons	25	ADCK4	All exons
12	TRPC6	All exons	26	TTC21B	All exons
13	PLCE1	All exons	27	NUP107	All exons
14	SMARCAL1	All exons			

Supplemental Table 2 Variants detected by Next generation sequencer in all 16 families

Gene	Chrom	Nucleotide Change	Codon	AA	Function Class	rs number	MAF	Allele frequency in Japanese	Patient ID
ACTN4	19	A>G	gAg/gGg	E524G	MISSENSE				122,122A,140
ACTN4	19	T>C	Tta/Cta	L855	SILENT	rs1136956	0.1875	T>C:0.05004	148B
ACTN4	19	C>T	aaC/aaT	N182	SILENT	rs3745859	0.3393	C>T:0.61958	72,122,122A,122C,124,148,148C,153,153E,154,161,175,198,205,279,285,297,305
ACTN4	19	G>A	ccG/ccA	P179	SILENT	rs11553600	0.1154	G>A:0.50000	148B
ADCK4	19	T>C	cAc/cGc	H133R	MISSENSE	rs3865452	0.4774	T>C:0.59639, T>G:0.00044	72,122,122A,122C,124,129,140,140A,148,148A,148C,153,153E,161,175,198,205,285,297,305
ADCK4	19	G>A	tCc/tTc	S379F	MISSENSE			G>A:0.00233	175
ADCK4	19	C>T	gcG/gcA	A215	SILENT	rs11538385	0.2294	C>T:0.15210	124,140A,148B,161
ADCK4	19	G>A	gaC/gaT	D485	SILENT	rs56276635	0.0102	G>A:0.03575	154
ADCK4	19	C>T	ggG/ggA	G180	SILENT	rs142414537	0.0018		148B
ADCK4	19	C>T	ctG/ctA	L3	SILENT	rs11673492	0.0992	C>T:0.00117	148B
ADCK4	19	G>C	ccC/ccG	P441	SILENT	rs142980507			124
ANLN	7	C>T	gCc/gTc	A1045V	MISSENSE	rs117705799	0.0012	C>T:0.00962	140
ANLN	7	G>A	Gaa/Aaa	E841K	MISSENSE	rs200824984	0.0064	G>A:0.01296	161,279
ANLN	7	A>G	Atg/Gtg	M514V	MISSENSE	rs748729525		A>G:0.00117	124
ANLN	7	G>A	aGa/aAa	R185K	MISSENSE	rs386352633		G>A:0.74606, G>C:0.00207, G>T:0.00083	72,122,122A,122C,124,129,140,140A,148,148A,148C,153,153E,161,198,205,285,297,305
ANLN	7	C>T	Cgc/Tgc	R810C	MISSENSE	rs144215679	0.0022	C>T:0.01042, C>G:0.00272	161,279
ANLN	7	C>G	tCg/tGg	S65W	MISSENSE	rs3735400	0.127	C>G:0.12597, C>T:0.00043	124,140,140A,148B,305

ANLN	7	T>G	ggT/ggG	G56	SILENT				198
ANLN	7	A>G	ctA/ctG	L273	SILENT	rs3735398	0.1156	A>G:0.12853	124,140,148B,305
ANLN	7	T>C	tcT/tcC	S502	SILENT	rs10224902	0.1328	T>C:0.13111	124,140,140A,148B,305
ANLN	7	G>A	gtG/gtA	V619	SILENT	rs17213431	0.0713	G>A:0.07801	153
ANLN	7	A>ACTT	act/aCTTct	T294TS	Insertion				161,205
ARHGAP24	4	G>T	cGg/cTg	R5L	MISSENSE	rs61758879	0.0317	G>T:0.12985	175
ARHGAP24	4	A>G	Aga/Gga	R643G	MISSENSE				198
ARHGAP24	4	A>G	gaA/gaG	E101	SILENT	rs6824722	0.3964	A>G:0.38293	140,148,175,198,279,285,297,305
ARHGAP24	4	T>C	aaT/aaC	N252	SILENT	rs10003909	0.3544	T>C:0.28023	124,140,148,154,198,279,297,305
ARHGAP24	4	G>A	agG/agA	R277	SILENT	rs11547776	0.2546	G>A:0.27958	124,140,148,154,198,279,297,305
CD2AP	6	C>T	Ctg/Ttg	L402	SILENT	rs2039503	0.017	C>T:0.99834, C>A:0.00083, C>G:0.00083	72,122,122A,122C,124,129,140, 140A,148,148B,153,153E,154,175, 198,205,279,285,305
COL4A3	2	C>T	gCg/gTg	A1555V	MISSENSE	rs369575989	4.00E-04		198
COL4A3	2	C>A	gaC/gaA	D1269E	MISSENSE	rs57611801	0.0387	C>A:0.33333	148B
COL4A3	2	C>A	gaC/gaA	D1347E	MISSENSE	rs73996414	0.02		148B
COL4A3	2	G>T	Gat/Tat	D326Y	MISSENSE	rs55703767	0.1158	G>T:0.12933	122,129,205
COL4A3	2	A>G	gAa/gGa	E162G	MISSENSE	rs6436669	0.2037	A>G:0.88419, A>T:0.00085, A>C:0.00042	72,122,122A,122C,124,129,140, 140A,148,148A,148B,148C,153, 153E,154,161,175,198,205,279,285, 297,305
COL4A3	2	G>A	Gag/Aag	E269K	MISSENSE	rs80109666	0.0607	G>A:0.13944	122A,161,205,279
COL4A3	2	G>C	Ggg/Cgg	G43R	MISSENSE	rs13424243	0.2302	G>C:0.09112	122,148B,198,205
COL4A3	2	T>C	cTg/cCg	L141P	MISSENSE	rs10178458	0.2033	T>C:0.88203, T>A:0.00084	72,122,122A,122C,124,129,140, 140A,148,148A,148B,148C,153, 153E,154,161,175,198,205,279,285, 297,305
COL4A3	2	C>T	Ccc/Tcc	P25S	MISSENSE	rs139271412	0.0114		148B

COL4A3	2	C>C	cCg/cTg	P574L	MISSENSE	rs28381984	0.4	C>T:0.52626	72,122,122A,122C,129,140,140A,148,148A,148B,148C,153,153E,154,175,285,297,305
COL4A3	2	G>A	ggG/ggA	G133	SILENT	rs75683214	0.0204		148B
COL4A3	2	C>T	Ctg/Ttg	L399	SILENT	rs10205042	0.2324	C>T:0.86613, C>G:0.00084	122,122A,122C,140,140A,148,148A,148B,148C,153,153E,154,161,175,205,279,285,297,305
COL4A3	2	G>A	ccG/ccA	P74	SILENT	rs187950806	4.00E-04		154
COL4A4	2	C>T	Gca/Aca	A931T	MISSENSE	rs75875272	0.0142	C>T:0.00117	148B
COL4A4	2	T>C	gAt/gGt	D682G	MISSENSE	rs142093416	4.00E-04	T>C:0.00566	124,279
COL4A4	2	T>A	Atg/Ttg	M1399L	MISSENSE	rs149117087	0.0022	T>A:0.00555	129
COL4A4	2	G>A	cCg/cTg	P1004L	MISSENSE	rs1800517	0.4527	G>A:0.47019	72,122A,122C,124,129,148B,154,161,175,205,279,285,305
COL4A4	2	G>C	Cca/Gca	P1291A	MISSENSE	rs34728338	0.0078		148B
COL4A4	2	G>A	Cca/Tca	P482S	MISSENSE	rs2229814	0.4515	G>A:0.50915, G>T:0.00042	7,122A,122C,124,129,140A,148,154,161,175,205,279,285,305
COL4A4	2	G>A	cCg/cTg	P759L	MISSENSE	rs36121515	0.0264	G>A:0.00149	148B
COL4A4	2	A>G	Tca/Cca	S1403P	MISSENSE	rs3752895	0.4738	A>G:0.38430	72,122C,124,129,148B,153,153E,154,161,205,279,297,305
COL4A4	2	C>T	Gtg/Atg	V1327M	MISSENSE	rs2229813	0.493	A>G:0.00117	72,122C,124,148B,153,153E,154,161,205,279,297,305
COL4A4	2	G>A	ttC/ttT	F1644	SILENT	rs2228557	0.4856	G>A:0.39342, G>C:0.00044	72,122C,124,129,148B,153,153E,154,161,205,279,297,305
COL4A4	2	C>T	ggG/ggA	G1198	SILENT	rs10203363	0.495	C>T:0.39508, C>A:0.00044	72,122C,124,129,148B,153,153E,154161,205,279,297,305
COL4A4	2	C>T	aaG/aaA	K1228	SILENT	rs2229812	0.4956	C>T:0.38428	72,122C,124,129,148B,253,153E,154,161,205,279,297,305
COL4A4	2	C>T	aaG/aaA	K932	SILENT	rs34591179	0.0142	C>T:0.00117	148B
COL4A4	2	C>T	ccG/ccA	P1360	SILENT	rs2228556	0.4918	C>T:0.39688	72,122C,124,129,148B,153,153E,

									154,161,205,279,297,305
COL4A4	2	G>A	ccC/ccT	P959	SILENT	rs79470996	0.0024	G>A:0.01538	285
COL4A4	2	T>C	gtA/gtG	V1516	SILENT	rs2228555	0.3594	T>C:0.57586, T>A:0.00042	72,122A,122C,124,129,148,148A, 148B,148C,153,153E,154,161,175, 205,279,285,297,305
COL4A4	2	A>G	taT/taC	Y316	SILENT	rs34509421	0.0351		148B
COL4A5	X	T>G	aTt/aGt	I444S	MISSENSE	rs2272946	0.1494	T>G:0.11118	148A,297
COL4A5	X	C>G	Cct/Gct	P739A	MISSENSE	rs104886164	0.0034	C>G:0.05981	122A,305
COL4A5	X	C>T	aCc/aTc	T1427I	MISSENSE	rs61746140	0.1274	C>T:0.08203	148A,297
COL4A5	X	G>C	ggG/ggC	G365	SILENT	rs2272945	0.1505	G>C:0.10625	148A,297
COL4A5	X	T>C	ctT/ctC	L685	SILENT	rs7884085	0.1499	T>C:0.09799	297
COL4A5	X	G>A	ccG/ccA	P783	SILENT	rs3747408	0.1489	G>A:0.10037	148A,297
COL4A5	X	A>G	caA/caG	Q1171	SILENT	rs2273051	0.178	A>G:0.10421	148A,297
COQ6	14	A>T	gAt/gTt	D314V	MISSENSE	rs2074930	0.1496	A>T:0.31024, A>G:0.00084	122A,122C,148A,148C,154,205, 279,285,305
COQ6	14	G>A	Gtg/Atg	V381M	MISSENSE	rs8500	0.3454	G>A:0.26639	124,140,140A,140B,153,153E,161, 175,198
COQ6	14	G>A	gaG/gaA	E330	SILENT	rs750043999		G>A:0.00363	161
COQ6	14	T>C	caT/caC	H165	SILENT	rs3180946	0.1849	T>C:0.07179	72,148B,154,161,198
GLA	X	T>C	gAg/gGg	E59G	MISSENSE				198
INF2	14	C>A	aaC/aaA	N558K	MISSENSE	rs562865823			148C,153E,161,205,279,285,297
INF2	14	C>T	cCg/cTg	P350L	MISSENSE	rs146529868	0.0088	C>T:0.03682	279
INF2	14	C>T	Cgg/Tgg	R660W	MISSENSE	rs138577569	0.002	C>T:0.04486	124,148,148A,148C,175,279,297
INF2	14	C>T	aCg/aTg	T1135M	MISSENSE	rs3803311	0.009	C>T:0.04770	72,140,305
INF2	14	A>C	Aca/Cca	T561P	MISSENSE				148C,153E,161,279,297
INF2	14	T>C	gaT/gaC	D1022	SILENT	rs4983535	0.1558	T>C:0.89831, T>A:0.00211, T>G:0.00211	72,122,122A,122C,124,129,140, 140A,148,148A,148B,148C,153, 153E,154,161,175,198,205,279,285,

									297,305
INF2	14	C>T	gaC/gaT	D1051	SILENT	rs117457867	0.0194	C>T:0.01407	205
INF2	14	T>C	gaT/gaC	D880	SILENT	rs10133301	0.0907	T>C:0.91917	72,122,122A,122C,124,129,140,140A,148,148A,148B,148C,153,153E,154,161,175,198,205,279,285,297,305
INF2	14	G>A	ctG/ctA	L14	SILENT	rs62638758	0.02	G>A:0.02440	161,205
INF2	14	A>C	ccA/ccC	P1069	SILENT	rs1128840	0.2097	A>C:0.88439, A>G:0.03249, A>T:0.00042	72,122,122A,122C,124,129,140,140A,148,148A,148B,148C,153,153E,154,161,175,198,205,279,285,297,305
INF2	14	C>T	ccC/ccT	P35	SILENT	rs4983530	0.0134	C>T:1.00000	72,122,122A,122C,124,129,140,140A,148,148A,148B,148C,153,153E,154,161,175,198,205,279,285,297,305
INF2	14	G>A	agG/agA	R1228	SILENT	rs189263181	0.0014	G>A:0.01269	72
INF2	14	A>C	ccA/ccC	P425	SILENT	rs760828390			148B
INF2	14	A>C	ccA/ccC	P502	SILENT	rs768434395			122,122A,122C,129,140,148B,153,154
INF2	14	G>T	tcG/tcT	S409	SILENT	rs3809455	0.0647	G>T:0.10009	140,140A
INF2	14	ACCCCACCCCCAC>ACC	accccaccccc accc/acc	TPPPP420T	Deletion				140A,148B,198
ITGA3	17	G>A	Gcc/Acc	A719T	MISSENSE	rs2230392	0.1546	G>A:0.32494	122A,122C,124,129,153,153E,154,161,205,285,297,305
ITGA3	17	C>T	ttC/ttT	F332	SILENT	rs2269772	0.2466	C>T:0.31495	122A,122C,124,129,153,153E,154,161,205,285,297,305
ITGA3	17	T>C	ctT/ctC	L410	SILENT	rs2285524	0.3053	T>C:0.35321	122A,122C,124,129,153,153E,154,161,175,205,285,297,305

ITGA3	17	C>G	ctC/ctG	L556	SILENT	rs200996148	0.0024	C>G:0.02753	124,161
ITGA3	17	A>C	Acc/Ccc	T429P	MISSENSE				198
LAMB2	3	A>C	gaT/gaG	D1303E	MISSENSE				148B
LAMB2	3	C>T	cGg/cAg	R1457Q	MISSENSE	rs148818522	0.003	C>T:0.01696	124,140
LAMB2	3	C>T	cGc/cAc	R95H	MISSENSE	rs147691227	2.00E-04		122
LMX1B	9	A>G	gaA/gaG	E147	SILENT	rs2277158	0.48	A>G:0.51294	122,122A,122C,124,129,140,140A,148,148A,148B,148C,279,285,297
LMX1B	9	G>C	tcG/tcC	S242	SILENT	rs13295990	0.4393	G>C:0.54060	122,122A,122C,124,129,140,140A,148,148A,148B,148C,154,279,285,297
MYH9	22	A>C	gcT/gcG	A1143	SILENT	rs710181	0.0174	A>C:0.99917, A>G:0.00041	72,122,122A,122C,124,129,140,140A,148,148A,148B,148C,153,153E,154,161,175,198,205,279,285,297,305
MYH9	22	C>A	gcG/gcT	A1624	SILENT	rs2269530	0.2937	C>A:0.58375	72,122A,122C,124,140,142A,148,148A,148B,148C,154,175,198,205,279,297,305
MYH9	22	G>A	gcC/gcT	A6	SILENT	rs141055332	0.002	G>A:0.01087	124
MYH9	22	T>C	Atc/Gtc	I1626V	MISSENSE	rs2269529	0.2941	T>C:0.58333	72,122A,122C,124,129,140,140A,148,148A,148B,148C,154,175,198,205,279,297,305
MYH9	22	A>G	aaT/aaC	N752	SILENT	rs9619601	0.0603	A>G:0.09483, A>T:0.00043	122,122C,148C,153E,161,198
MYH9	22	G>A	Cgg/Tgg	R1528W	MISSENSE	rs201405521			154
MYH9	22	C>T	cgG/cgA	R1633	SILENT	rs5756130	0.0962	C>T:0.11641	148B,153,153E,161,285
MYO1E	15	T>C	gcA/gcG	A891	SILENT	rs2306791	0.2554	T>C:0.10366,T>A:0.00044	72,122,122C,124,148A,148C,279,297
MYO1E	15	G>A	tgC/tgT	C107	SILENT	rs117371632	8.00E-04	G>A:0.01171	129
MYO1E	15	C>A	gGt/gTt	G940V	MISSENSE				153,153E

MYO1E	15	C>T	cGg/cAg	R362Q	MISSENSE	rs780232009		C>T:0.00117	205
MYO1E	15	G>A	tcC/tcT	S336	SILENT	rs2230155	0.4928	G>A:0.70618, G>T:0.00042	72,122,122A,122C,124,129,140, 140A,148,148A,148C,153,153E,154 ,161,198,205,279,285,297,305
MYO1E	15	G>A	tcC/tcT	S991	SILENT	rs140456373	0.0014	G>A:0.00636	140,161
NPHS1	19	C>T	Gag/Aag	E117K	MISSENSE	rs3814995	0.2919	C>T:0.60717	72,122,122A,122C,124,140,140A, 148,148A,153,153E,154,161,175, 279,285,297,305
NPHS1	19	C>T	Gag/Aag	E447K	MISSENSE	rs28939695	0.007	C>T:0.07155	122A,122C,140,140A,285
NPHS1	19	G>A	atC/atT	I98	SILENT	rs2285450	0.0731	G>A:0.15895	161,198
NPHS1	19	G>C	cCg/cGg	P264R	MISSENSE	rs34982899	0.0108		148B
NPHS1	19	C>T	tcG/tcA	S1105	SILENT	rs2071327	0.3676	C>T:0.64416	72,122,122C,124,129,140A,148, 148A,148C,153,153E,161,175,198, 205,279,285,297,305
NPHS1	19	G>A	acC/acT	T741	SILENT	rs2073901	0.0152	G>A:0.08549	198
NPHS1	19	G>A	gtC/gtT	V763	SILENT	rs437168	0.1937	G>A:0.17034	161,175,198
NPHS1	19	G>A	Cgg/Tgg	R460W	MISSENSE	rs749319334		G>A:0.00224	305
NPHS1	19	C>G	Gtg/Ctg	V957L	MISSENSE	rs114849139	0.0028	C>G:0.01826	129
NPHS2	1	G>A	gcC/gcT	A318	SILENT	rs1410592	0.4123	G>A:0.53580	122,122A,122C,124,129,140A,148, 153,153E,154,161,198,205,279,285, 305
NPHS2	1	T>C	ggA/ggG	G34	SILENT	rs1079292	0.0691	T>C:0.97813, T>A:0.00210, T>G:0.00126	72,122,122A,122C,124,129,140, 140A,148,148A,148B,148C,153, 153E,154,161,175,198,205,279,285, 297,305
NPHS2	1	T>C	ctA/ctG	L346	SILENT	rs3818587	0.0711	T>C:0.05465	148A,148C,175
NPHS2	1	G>A	tcC/tcT	S96	SILENT	rs3738423	0.0711	G>A:0.05238	148A,148C,175

NUP107	12	C>A	gaC/gaA	D523E	MISSENSE				205
NUP107	12	C>T	Ctt/Ttt	L519F	MISSENSE	rs755930919			205
NUP107	12	C>T	cCg/cTg	P318L	MISSENSE	rs751177461		C>T:0.00117	154
NUP107	12	G>A	caG/caA	Q463	SILENT	rs17851475	0.2198	G>A:0.25424, G>T:0.00045	72,148,148B,154,279,285,305
NUP107	12	G>A	cgG/cgA	R24	SILENT	rs2259588	0.2206	G>A:0.24764	72,148,148B,153,153E,154,279, 285,305
NUP107	12	G>C	tcG/tcC	S167	SILENT	rs371149690		G>C:0.00274	154
PLCE1	10	A>G	gAg/gGg	E312G	MISSENSE				198
PLCE1	10	A>G	cAc/cGc	H1619R	MISSENSE	rs2274223	0.2985	A>G:0.26045	72,122,122A,122C,124,129,140, 140A,148B,153,154,198,205,279, 285,297,305
PLCE1	10	G>C	cGa/cCa	R1267P	MISSENSE	rs2274224	0.4862	G>C:0.49061, G>A:0.00049	72,122,122A,122C,124,129,140, 140A,148B,153,153E,154,175,198, 205,279,285,297,305
PLCE1	10	G>A	cGc/cAc	R191H	MISSENSE	rs757336023		G>A:0.00440	198
PLCE1	10	G>T	cGc/cTc	R240L	MISSENSE	rs17417407	0.2011	G>T:0.20076, G>A:0.00042	72,122A,122C,140,148B,154,161, 198,205,297
PLCE1	10	C>T	aCc/aTc	T1469I	MISSENSE	rs3765524	0.3079	C>T:0.25859	122,122A,122C,124,140,140A, 148B,153,154,198,205,279,285,297
PLCE1	10	T>C	tgT/tgC	C270	SILENT	rs17109671	0.4605	T>C:0.50872	72,122,122A,122C,124,129,140, 140A,148,148A,148B,153,153E, 154,161,175,198,205,279,285,297, 305
PLCE1	10	G>A	gaG/gaA	E320	SILENT	rs17109674	0.3782	G>A:0.48339, G>C:0.00042	72,122,122A,122C,124,129,140, 140A,148,148A,148C,153,153E, 154,161,175,198,205,279,285,297,

									305
PLCE1	10	C>T	ttC/ttT	F1618	SILENT	rs78828338	0.0016	C>T:0.02862	198,205
PLCE1	10	G>A	tcG/tcA	S1113	SILENT	rs41291134	0.0653	G>A:0.03177	285
PTPRO	12	G>A	Gaa/Aaa	E145K	MISSENSE	rs551711163	2.00E-04	G>A:0.00137	140A
PTPRO	12	A>C	Acc/Ccc	T765P	MISSENSE				198
PTPRO	12	C>T	gcC/gcT	A221	SILENT	rs140390981	4.00E-04	C>T:0.00870	198
PTPRO	12	C>T	gaC/gaT	D1059	SILENT	rs77872564	0.0096	C>T:0.04092	153,153E,161,285
PTPRO	12	G>A	ggG/ggA	G1012	SILENT	rs3748299	0.1326	G>A:0.30991	129,154,279
PTPRO	12	G>A	ccG/ccA	P106	SILENT	rs755499017		G>A:0.00117	305
PTPRO	12	T>C	ggT/ggC	G542	SILENT	rs1050646	0.1196	T>C:0.08212	140,285,297
PTPRO	12	C>A	ggC/ggA	G696	SILENT	rs6488782	0.4032	C>A:0.14733	140,153,154,205,279,285,297,305
SCARB2	4	C>T	gGa/gAa	G319E	MISSENSE	rs117157204	8.00E-04	C>T:0.02675	148A,148C
SCARB2	4	T>A	Ata/Tta	I144L	MISSENSE	rs117600063	0.0016	T>A:0.02098	297
SMARCAL1	2	G>C	Gaa/Caa	E377Q	MISSENSE	rs2066518	0.0729	G>C:0.16100	72,122A,122C,148,148A,148C,198
SMARCAL1	2	G>A	cGt/cAt	R114H	MISSENSE	rs11555797	0.0146	G>A:0.02487	205
SMARCAL1	2	C>T	gcC/gcT	A320	SILENT	rs2066513	0.0176	C>T:0.03733	205
SMARCAL1	2	A>G	ccA/ccG	P113	SILENT				297
SMARCAL1	2	T>C	acT/acC	T690	SILENT	rs2066527	0.0845	T>C:0.00408	148B
TRPC6	11	G>A	gCg/gTg	A404V	MISSENSE	rs36111323	0.0643	G>A:0.09289	122,122C,140,140A,148B,175,198, 205,285
TRPC6	11	G>A	Ccc/Tcc	P15S	MISSENSE	rs3802829	0.0677	G>A:0.15032	122,205
TRPC6	11	A>G	aaT/aaC	N561	SILENT	rs12366144	0.2989	A>G:0.14177	122,122A,122C,124,140,140A, 140B,153,153E,175,198,205,285
TRPC6	11	C>T	caG/caA	Q904	SILENT	rs12805398	0.0749	C>T:0.17937	122,122A,140,140A,148B,153, 153E,154,175,198,205,285,305
TTC21B	2	G>A	Ctt/Ttt	L473F	MISSENSE	rs2163649	0.0315	G>A:0.06876	205,279
TTC21B	2	T>C	Aca/Gca	T276A	MISSENSE	rs7592429	0.0519	T>C:1.00000	72,122,122A,122C,124,129,140, 140A,148,148A,148B,148C,153, 153E,161,175,198,205,279,285,297,

									305
TTC21B	2	C>T	Gtg/Atg	V201M	MISSENSE	rs1432273	0.3327	C>T:0.78335	122,122A,122C,124,129,140,140A,148A,148B,153,153E,154,161,175,198,205,279,285,297
TTC21B	2	A>G	ttT/ttC	F725	SILENT	rs10176588	0.2774	A>G:0.19330	122,122C,148,148A,153E,205,285,305
TTC21B	2	C>G	ctG/ctC	L795	SILENT	rs80225158	0.0341	C>G:0.07991	205,279
TTC21B	2	G>A	taC/taT	Y565	SILENT	rs6750044	0.2917	G>A:0.19751	122,122C,148,148A,148C,153E,205,285,297,305
WT1	11	C>A	Gcg/Tcg	A100S	MISSENSE				297
WT1	11	C>G	caG/caC	Q155H	MISSENSE	rs758900425		C>G:0.00117	161
WT1	11	G>A	ccC/ccT	P110	SILENT	rs1799925	0.3039	G>A:0.65846, G>T:0.00051	122,122A,122C,129,140,140A,148,148A,148C,153,153E,154,161,175,198,205,279,285,297,305
WT1	11	C>A	ccG/ccT	P66	SILENT	rs2234582	0.3017	C>A:0.09792	148B,154,198,285,305
WT1	11	T>C	cgA/cgG	R140	SILENT	rs16754	0.3315	T>C:0.66562, T>A:0.00045	122,122A,122C,129,140,140A,148,148A,148C,153,153E,154,161,175,205,279,285,297

Chrom：chromosome. rs number: A reference SNP ID number assigned by The National Center for Biotechnology Information. MAF: Global minor allele frequency

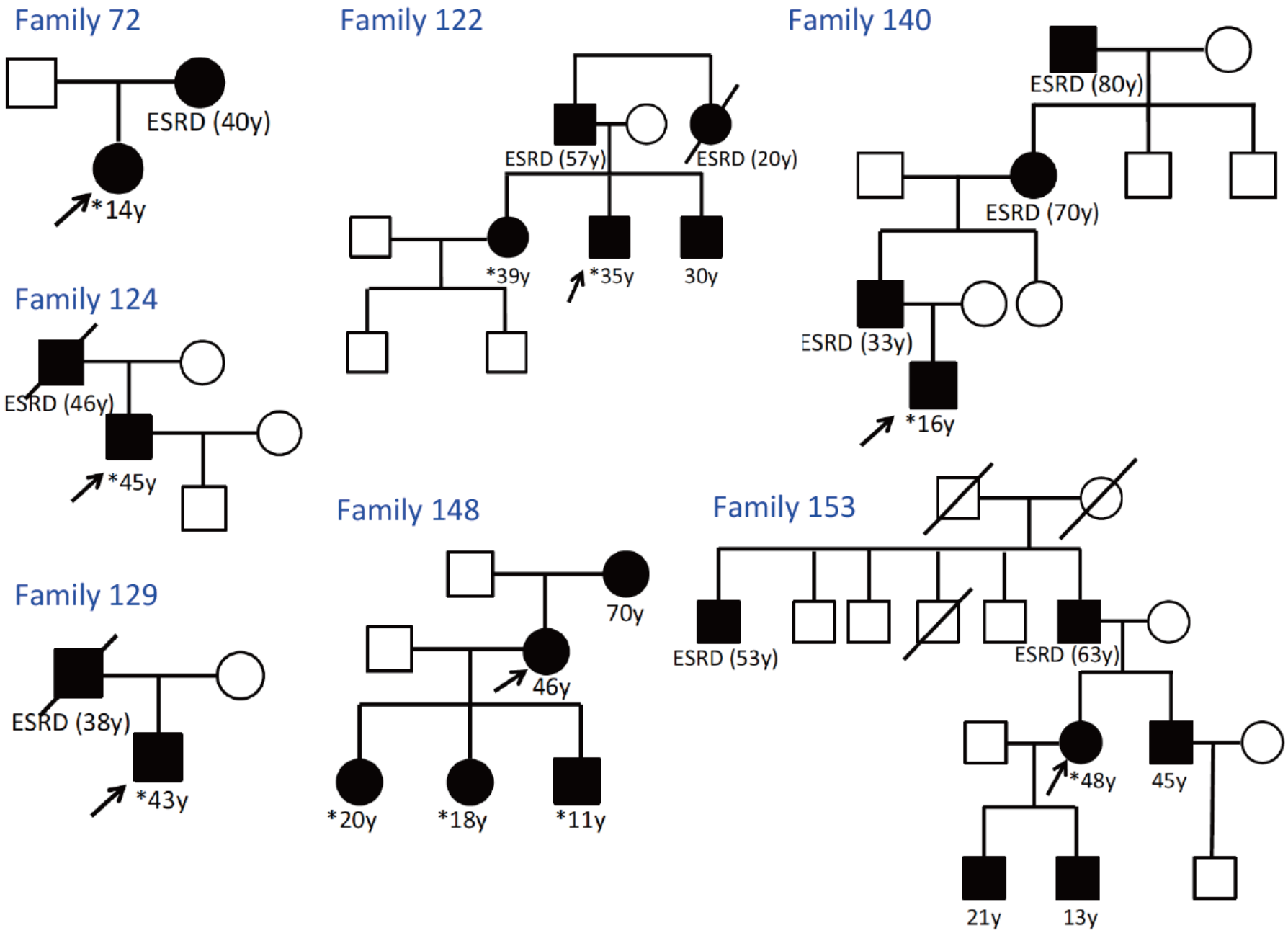
Family 72
ESRD (40y)
*14y
Family 122
ESRD (57y)
ESRD (20y)
*39y
*35y
30y
Family 140
ESRD (80y)
ESRD (70y)
ESRD (33y)
*16y
Family 124
ESRD (46y)
*45y
Family 148
70y
46y
*20y
*18y
*11y
Family 153
ESRD (53y)
ESRD (63y)
*48y
45y
21y
13y
Family 129
ESRD (38y)
*43y

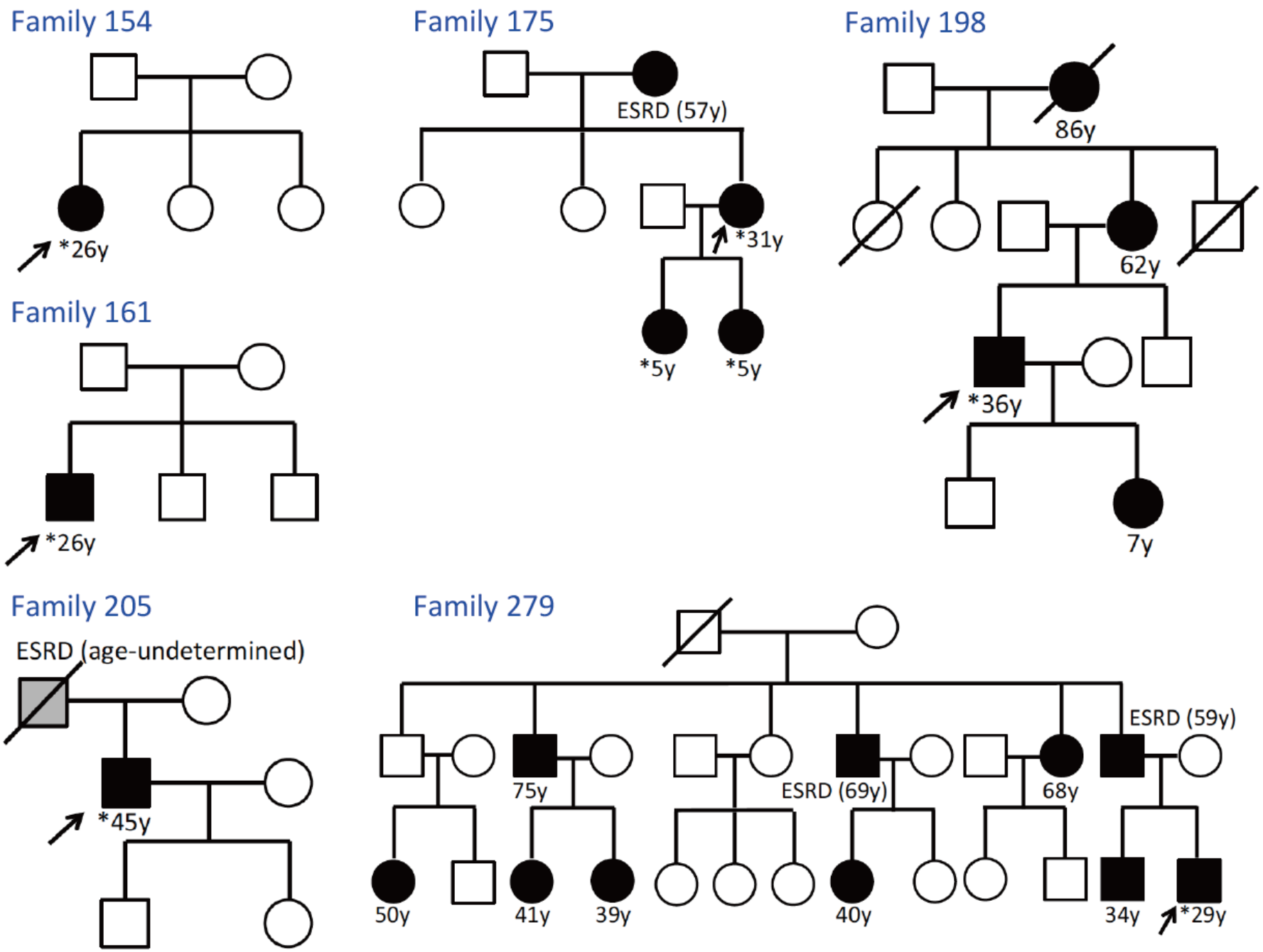
Family 154
*26y
Family 175
ESRD (57y)
*31y
*5y
*5y
Family 198
86y
62y
*36y
7y
Family 161
*26y
Family 205
ESRD (age-undetermined)
*45y
Family 279
ESRD (59y)
75y
ESRD (69y)
68y
50y
41y
39y
40y
34y
*29y

Family 285

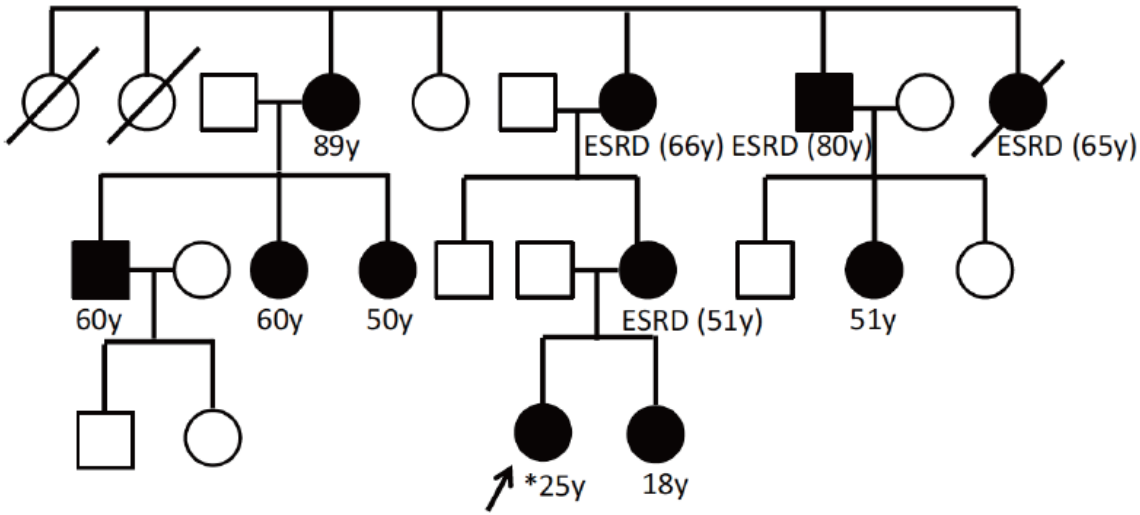

Family 297

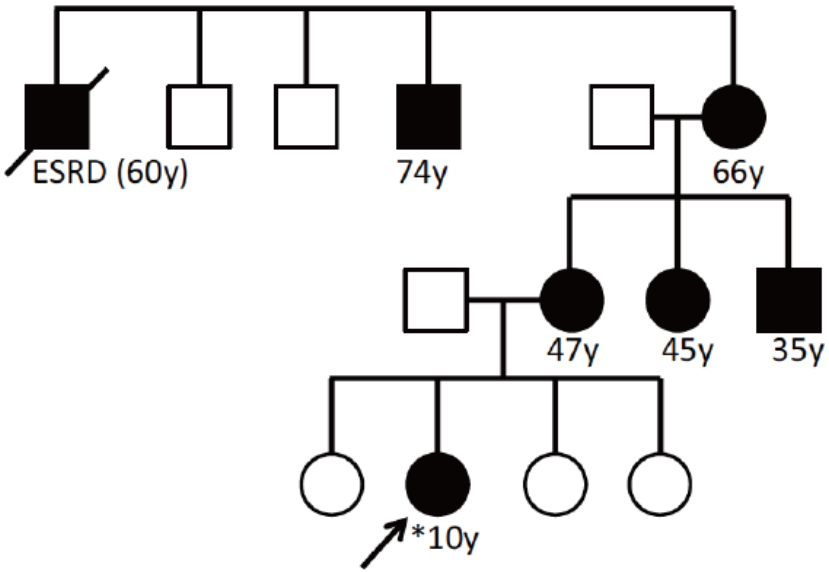

Family 305

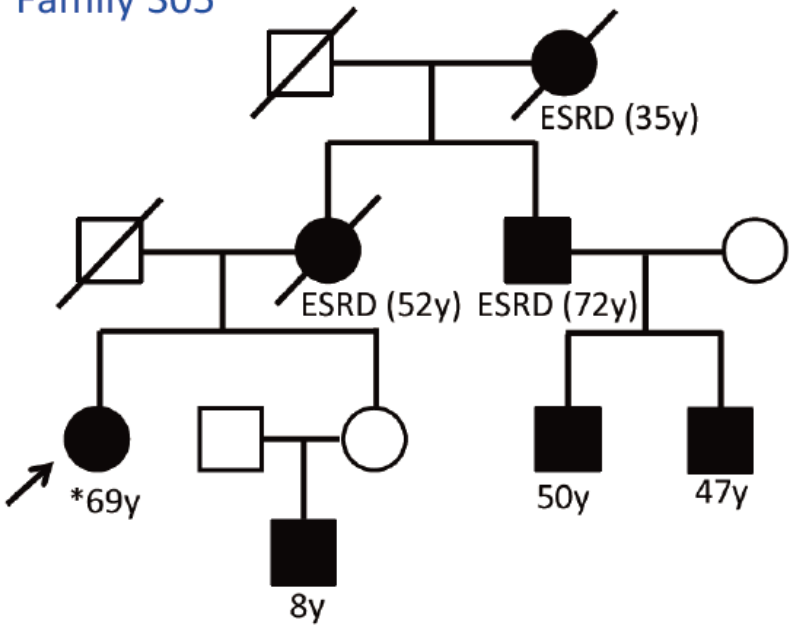

Supplementary Figure 1

Figure legend: Family trees for all patients

Filled circles and squares represent the patients with renal disease. Diagonals indicate deceased persons. Arrows indicate probands. Asterisks show patients who were conducted genetic analysis. The numbers shown in the upper-left indicate the ages of registration. ESRD: end-stage renal disease. The numbers in the parentheses indicate the age at onset of ESRD.