Figure S5

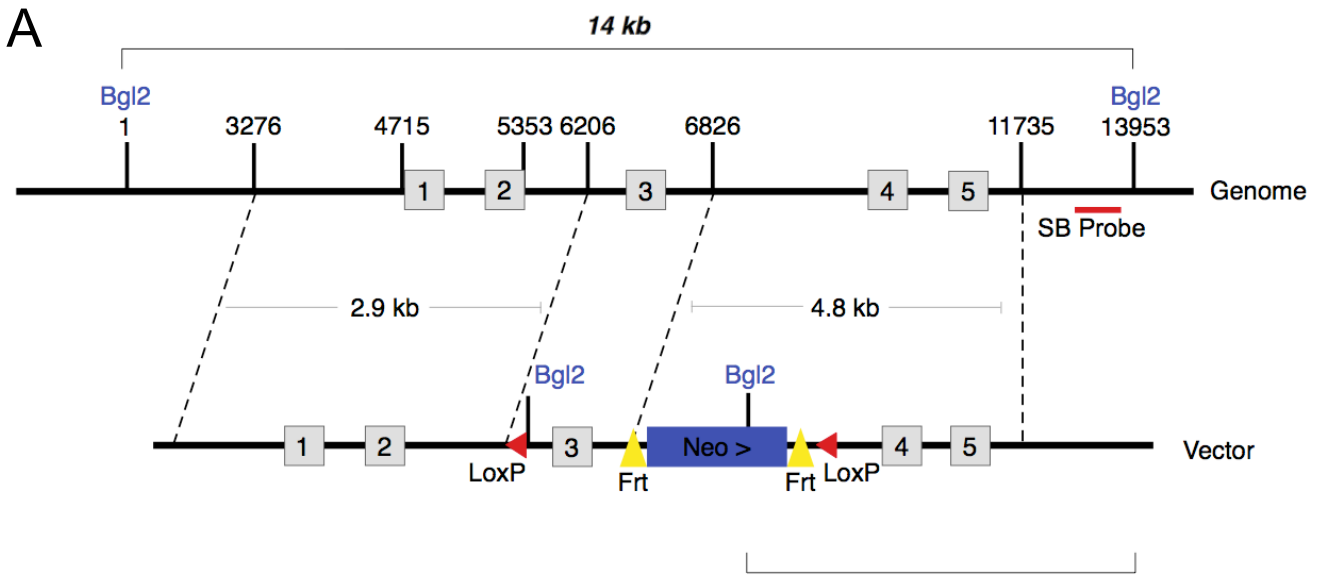
A
14 kb
Bgl2
1
3276
4715
5353 6206
6826
11735
Bgl2
13953
1
2
3
4
5
Genome
SB Probe
2.9 kb
4.8 kb
Bgl2
Bgl2
1
2
3
Neo >
4
5
Vector
LoxP
Frt
Frt
LoxP

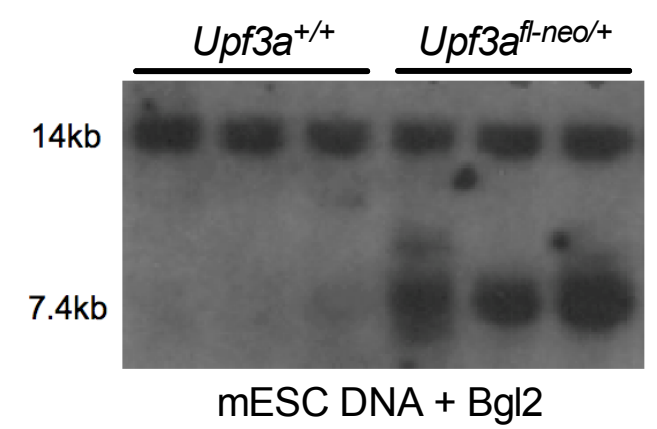
B
Upf3a+/+
Upf3afl-neo/+
14kb
7.4kb
mESC DNA + Bgl2

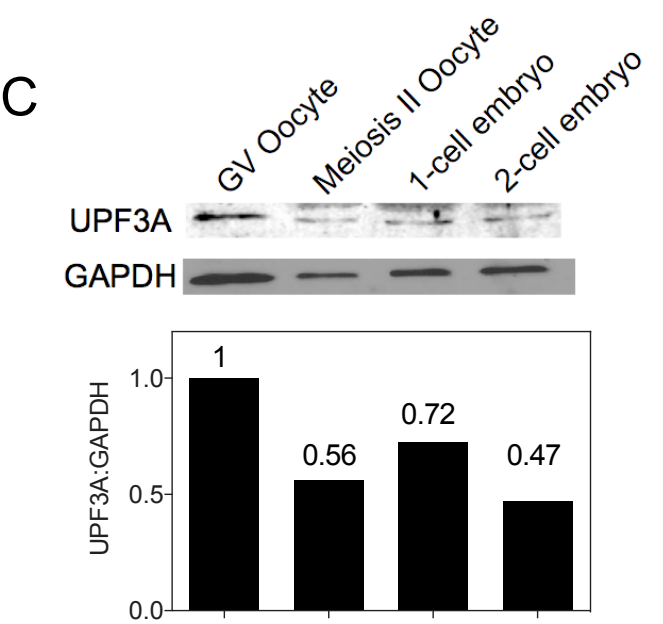
C
GV Oocyte
Meiosis II Oocyte
1-cell embryo
2-cell embryo
UPF3A
GAPDH
UPF3A:GAPDH
1.0
0.5
0.0
1
0.56
0.72
0.47