The American Journal of Human Genetics, Volume *92*

Supplemental Data

Mutations in *WNT1* Cause

Different Forms of Bone Fragility

Katharina Keupp, Filippo Beleggia, Hülya Kayserili, Aileen M. Barnes, Magdalena Steiner, Oliver Semler, Björn Fischer, Gökhan Yigit, Claudia Y. Janda, Jutta Becker, Stefan Breer, Umut Altunoglu, Johannes Grünhagen, Peter Krawitz, Jochen Hecht, Thorsten Schinke, Elena Makareeva, Ekkehart Lausch, Tufan Cankaya, José A. Caparrós-Martín, Pablo Lapunzina, Samia Temtamy, Mona Aglan, Bernhard Zabel, Peer Eysel, Friederike Koerber, Sergey Leikin, K. Christopher Garcia, Christian Netzer, Eckhard Schönau, Victor L. Ruiz-Perez, Stefan Mundlos, Michael Amling, Uwe Kornak, Joan Marini, and Bernd Wollnik

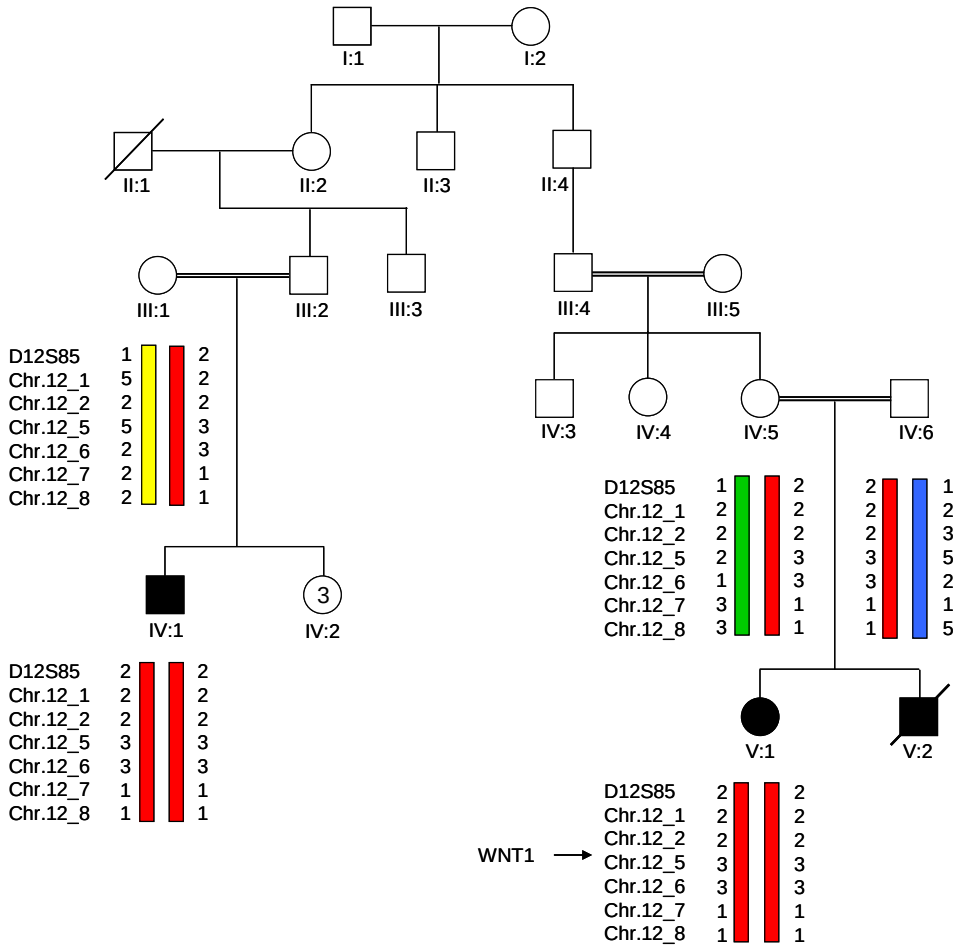

Figure S1. **Haplotype Analysis of a Large Turkish Family**

Haplotype analysis performed with polymorphic microsatellite markers shows the critical homozygous region (red bars) in the affected individuals IV:1 and V:1 of family 1. Polymorphic markers were identified and chosen with UCSC Genome Browser hg19 (http://genome.ucsc.edu/). The following polymorphic regions on chromosome 12 were amplified and used for marker analysis: D12S85 (47336723-47336847), Chr12_1 (48191489-48191829), Chr12_2 (48609209-48609551), Chr12_5 (49797228-49797574), Chr12_6 (50000120-50000460), Chr12_7 (50468494-50468840), Chr12_8 (51017026-51017371). Arrow showing *WNT1* located within the homozygous region on chromosome 12q13.12.

Table S1. Filter Strategy for Variants Found in Whole-Exome Sequencing of the Index Patient V:1

Filter	Count
Total variations	96,896
Not in in-house database	17,929
Not in dbSNP, 1000genomes and EVS	1,957
Protein change or within 25bp from exon-intron boundary	390
Homozygous (Allele frequency >75%)	27
Within homozygous regions	11
Severe protein changing mutations	1

Table S2. Novel Variants Located within Large Stretches of Homozygosity (HR)

Chromosome	Position	Reference Allele	Alternative Allele	Coverage Depth	Alternative Allele %	Consequence	Gene	Length of HR (Mb)
2	136564690	CTC	-	30	100	splicing +6	LCT	2.60
5	178413122	C	T	1	100	splicing +9	GRM6	2.93
8	33354235	-	GAT	18	88	K205insKD	MAK16	14.67
8	101146559	G	A	29	100	R570W	FBXO43	5.01
11	64851028	G	C	29	75	splicing -6	CDCA5	1.14
12	29469774	G	C	11	100	G319A	FAR2	27.93
12	49375163	-	C	50	96	H287fs	WNT1	27.93
12	53224092	G	C	15	100	splicing +16	KRT79	27.93
19	16636513	G	A	5	100	splicing -25	CHERP	18.06
19	16687752	C	T	13	100	V297M	MED26	18.06
22	39815651	G	C	8	75	splicing + 16	TAB1	0.94

Table S3. Ten Largest Stretches of Homozygosity Analyzed by Variants Found in Whole-Exome Sequencing Data of the Index Patient

Chromosome	Start	End	Length (Mb)
X	71813191	100357417	28.54
12	26405724	54339052	27.93
3	156697097	182871464	26.17
15	0	24921115	24.92
5	13944512	32057893	18.11
19	15290125	33353464	18.06
8	23702587	38373792	14.67
5	78421959	89703641	11.28
2	121757529	133014602	11.27
14	39871742	50319327	10.45
8	41906095	51351022	9.44

Table S4. Clinical Findings in Patients with Autosomal-Dominant Osteoporosis

Patient	Sex	Age	Molecular Basis (*WNT1*)	DXA T-Score (L1-L4)	DXA T-Score (Prox. Femur)	Skeletal Findings	Serum Markers (Bone Metabolism)
II:1	female	74 yrs	R235W	n.a.	-3.0	-osteoporosis with multiple atraumatic vertebral fractures -multiple atraumatic rib fractures	-bAP low-normal (9.1 µg/l) -osteocalcin low-normal (7.3 µg/l) -DPD normal
III:2	male	43 yrs	R235W	-2.6	-2.7	-osteoporosis -multiple atraumatic rib fractures since 20 years of life	-bAP low-normal (10.8 µg/l) -osteocalcin low (10.9 µg/l) -DPD normal
III:3	female	48 yrs	R235W	-1.4	-1.4	-osteopenia -basal skull fracture (2003) -traumatic head of fibula fracture (03/2010) with delayed healing process	-bAP low-normal (8.2 µg/l) -osteocalcin normal (8.6 µg/l) -DPD n.a.
IV:2	female	6 yrs	R235W	n.a.	n.a.	normal	-bAP normal (54 µg/l) -osteocalcin normal (43.2 µg/l) -DPD n.a.

n.a. = not available/unknown