SUPPLEMENTARY FIGURE 1. Phylogenetic analysis of major OTUs of less abundant phyla of *Bacteria* from the WLB sediment core. The unrooted phylogenetic tree was constructed by maximum likelihood. A mask of 759 nucleotides with non-ambiguously aligned positions was used. Bootstrap values (100 replicates) above 60 are shown above the relevant node. GenBank accession numbers of sequences from other studies are included.

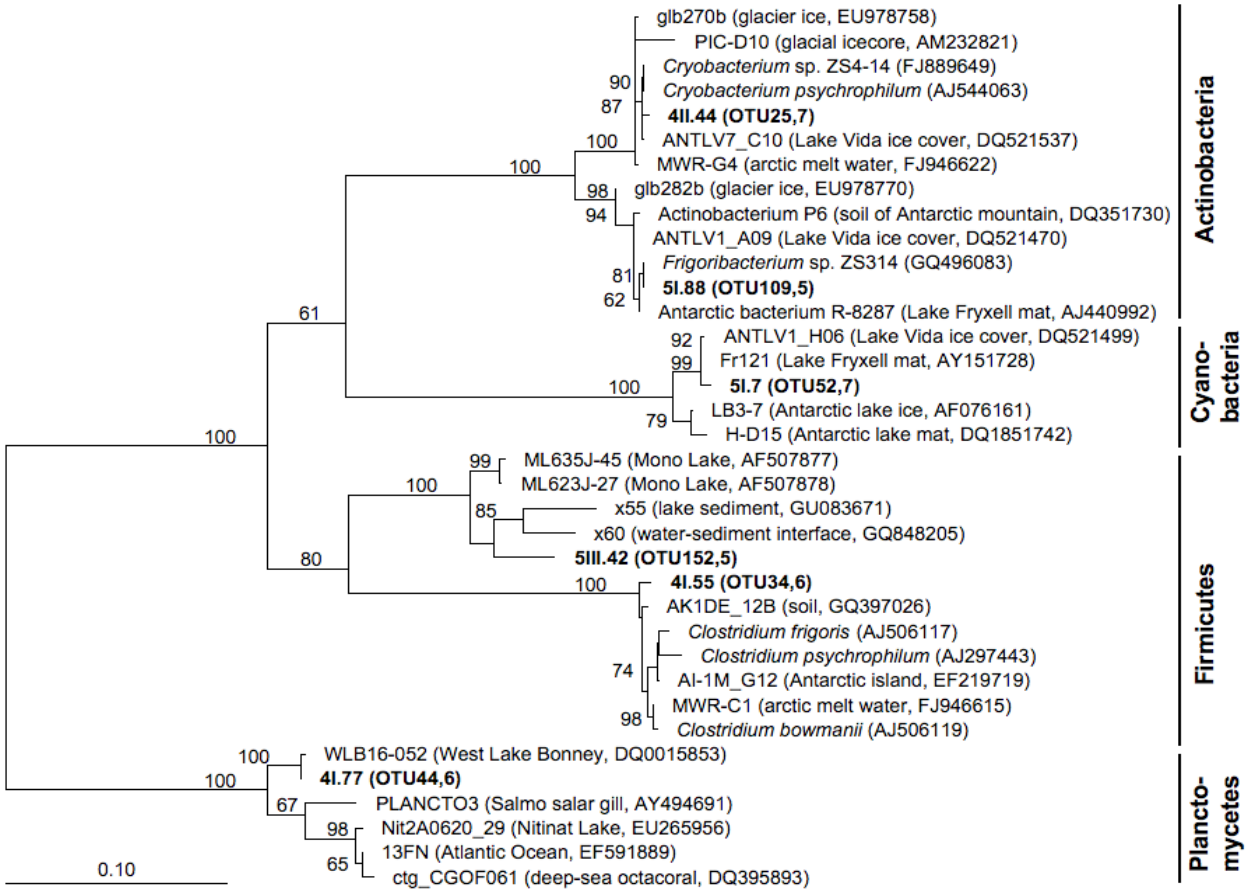
glb270b (glacier ice, EU978758)
PIC-D10 (glacial icecore, AM232821)
Cryobacterium sp. ZS4-14 (FJ889649)
Cryobacterium psychrophilum (AJ544063)
4II.44 (OTU25,7)
ANTLV7_C10 (Lake Vida ice cover, DQ521537)
MWR-G4 (arctic melt water, FJ946622)
glb282b (glacier ice, EU978770)
Actinobacterium P6 (soil of Antarctic mountain, DQ351730)
ANTLV1_A09 (Lake Vida ice cover, DQ521470)
Frigoribacterium sp. ZS314 (GQ496083)
5I.88 (OTU109,5)
Antarctic bacterium R-8287 (Lake Fryxell mat, AJ440992)
ANTLV1_H06 (Lake Vida ice cover, DQ521499)
Fr121 (Lake Fryxell mat, AY151728)
5I.7 (OTU52,7)
LB3-7 (Antarctic lake ice, AF076161)
H-D15 (Antarctic lake mat, DQ1851742)
ML635J-45 (Mono Lake, AF507877)
ML623J-27 (Mono Lake, AF507878)
x55 (lake sediment, GU083671)
x60 (water-sediment interface, GQ848205)
5III.42 (OTU152,5)
4I.55 (OTU34,6)
AK1DE_12B (soil, GQ397026)
Clostridium frigoris (AJ506117)
Clostridium psychrophilum (AJ297443)
AI-1M_G12 (Antarctic island, EF219719)
MWR-C1 (arctic melt water, FJ946615)
Clostridium bowmanii (AJ506119)
WLB16-052 (West Lake Bonney, DQ0015853)
4I.77 (OTU44,6)
PLANCTO3 (Salmo salar gill, AY494691)
Nit2A0620_29 (Nitinat Lake, EU265956)
13FN (Atlantic Ocean, EF591889)
ctg_CGOF061 (deep-sea octacoral, DQ395893)
0.10
Actinobacteria
Cyano-bacteria
Firmicutes
Plancto-mycetes

SUPPLEMENTARY REFERENCES:

1. **Ashelford, K. E., N. A. Chuzhanova, J. C. Fry, A. J. Jones, and A. J. Weightman.** 2005. At Least 1 in 20 16S rRNA Sequence Records Currently Held in Public Repositories Is Estimated To Contain Substantial Anomalies. Appl. Environ. Microbiol. **71:**7724-7736.
2. **Bintrim, S. B., T. J. Donohue, J. Handelsman, G. P. Roberts, and R. M. Goodman.** 1997. Molecular phylogeny of Archaea from soil. Proceedings of the National Academy of Sciences of the United States of America **94:**277-282.
3. **DeLong, E. F.** 1992. Archaea in coastal marine environments. Proceedings of the National Academy of Sciences of the United States of America **89:**5685-5689.
4. **Esty, W. W.** 1986. The efficiency of Good's nonparametric coverage estimator. The Annals of Statistics **14:**1257-1260.
5. **Hill, T. C. J., K. A. Walsh, J. A. Harris, and B. F. Moffett.** 2003. Using ecological diversity measures with bacterial communities. FEMS Microbiology Ecology **43:**1-11.
6. **Kulp, T. R., S. E. Hoeft, L. G. Miller, C. Saltikov, J. N. Murphy, S. Han, B. Lanoil, and R. S. Oremland.** 2006. Dissimilatory Arsenate and Sulfate Reduction in Sediments of Two Hypersaline, Arsenic-Rich Soda Lakes: Mono and Searles Lakes, California. Appl. Environ. Microbiol. **72:**6514-6526.

7. **Lane, D. J.** 1991. 16S/23S rRNA sequencing, p. 115-175. *In* E. Stackebrandt and M. Goodfellow (ed.), Nucleic acid techniques in bacterial systematics. John Wiley & Sons.

8. **Lanoil, B., M. La Duc, S. Sweet, K. Nealson, and R. Sassen.** (2001) *Bacteria* and *Archaea* physically associated with Gulf of Mexico gas hydrates. Appl. Environ. Microbiol. 67:5143-5153

9. **Ludwig, W., O. Strunk, R. Westram, L. Richter, H. Meier, Yadhukumar, A. Buchner, T. Lai, S. Steppi, G. Jobb, W. Forster, I. Brettske, S. Gerber, A. W. Ginhart, O. Gross, S. Grumann, S. Hermann, R. Jost, A. Konig, T. Liss, R. Lussmann, M. May, B. Nonhoff, B. Reichel, R. Strehlow, A. Stamatakis, N. Stuckmann, A. Vilbig, M. Lenke, T. Ludwig, A. Bode, and K.-H. Schleifer.** 2004. ARB: a software environment for sequence data. Nucl. Acids Res. **32:**1363-1371.

10. **Muyzer, G., E. C. de Waal, and A. G. Uitterlinden.** 1993. Profiling of complex microbial populations by denaturing gradient gel electrophoresis analysis of polymerase chain reaction-amplified genes coding for 16S rRNA. Appl. Environ. Microbiol. **59:**695-700.

11. **Øvreås, L., L. Forney, F. L. Daae, and V. Torsvik.** 1997. Distribution of bacterioplankton in meromictic Lake Sælenvannet, as determined by denaturing gradient gel electrophoresis of PCR-amplified gene fragments coding for 16S rRNA. Appl. Environ. Microbiol. **63:**3367-3373.

12. **Schloss, P. D., and J. Handelsman.** 2005. Introducing DOTUR, a Computer Program for Defining Operational Taxonomic Units and Estimating Species Richness. Appl. Environ. Microbiol. **71:**1501-1506.

13. **Schloss, P. D., and J. Handelsman.** 2006. Introducing TreeClimber, a Test to Compare Microbial Community Structures. Appl. Environ. Microbiol. **72:**2379-2384.

14. **Yu, Z., and M. Morrison.** 2004. Comparisons of Different Hypervariable Regions of rrs Genes for Use in Fingerprinting of Microbial Communities by PCR-Denaturing Gradient Gel Electrophoresis. Appl. Environ. Microbiol. **70:**4800-4806