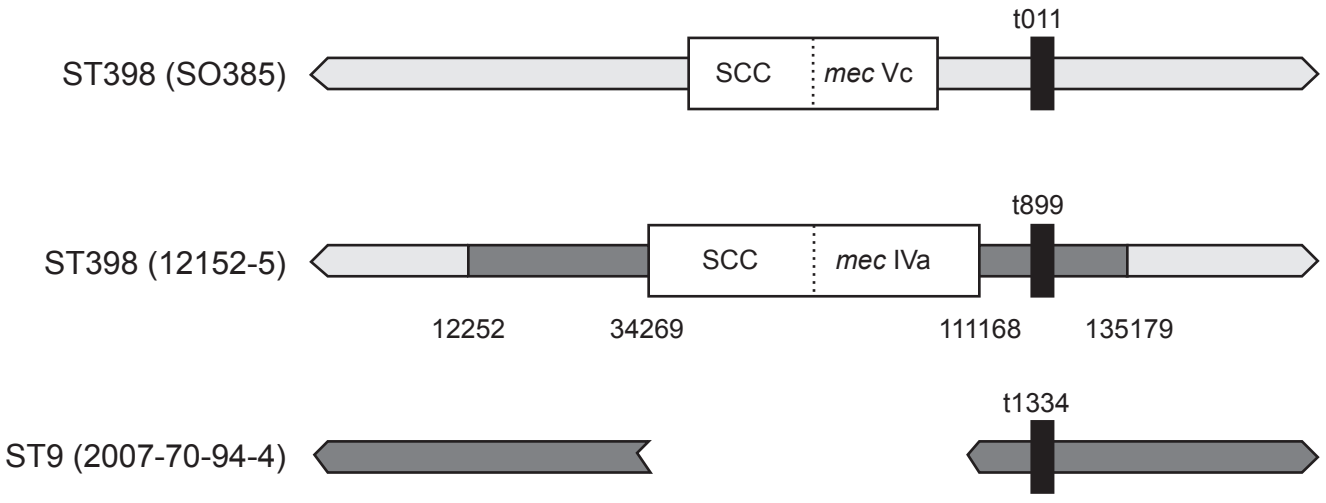
t011
ST398 (SO385)
SCC
mec Vc
t899
ST398 (12152-5)
SCC
mec IVa
12252
34269
111168
135179
t1334
ST9 (2007-70-94-4)