The American Journal of Human Genetics, Volume *89*
Supplemental Data

Mutations in *DNAJC5*, Encoding Cysteine-String Protein Alpha, Cause Autosomal-Dominant Adult Neuronal Ceroid Lipofuscinosis

Lenka Nosková, Viktor Stránecký, Hana Hartmannová, Anna Přistoupilová, Veronika Barešová, Robert Ivánek, Helena Hůlková, Helena Jahnová, Julie van der Zee, John F. Staropoli, Katherine B. Sims, Jaana Tyynelä, Christine Van Broeckhoven, Peter C.G. Nijssen, Sara E. Mole, Milan Elleder, and Stanislav Kmoch

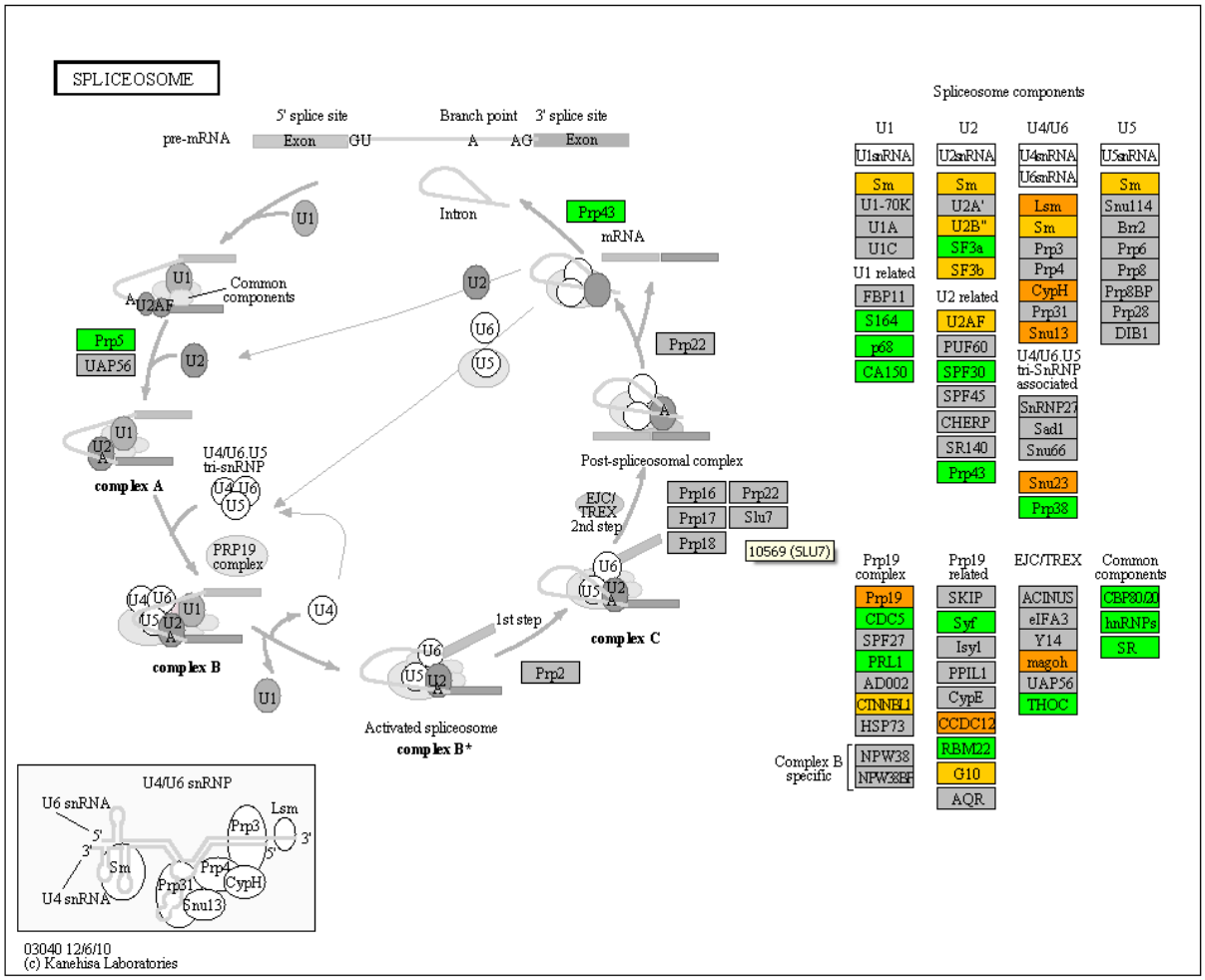

Figure S1. Significant gene expression changes in spliceosome pathway identified in NCL4 patients´ leucocytes compare to controls. Genes with reduced transcript amounts are shown in green color, genes with increased transcript amounts are shown in yellow and orange color.

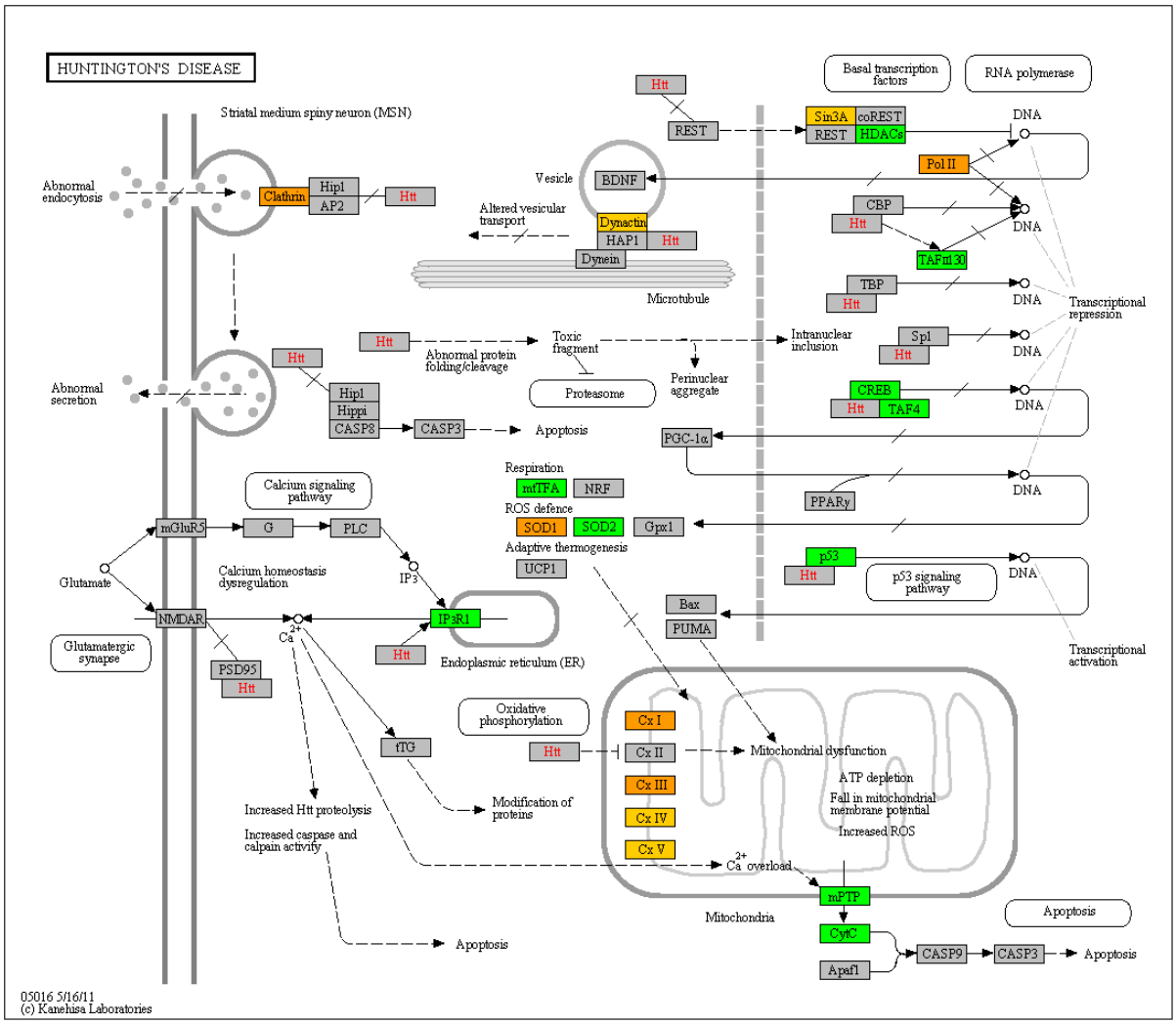

Figure S2. Significant gene expression changes in Huntington´s disease pathway identified in NCL4 patients´ leucocytes compare to controls. Genes with reduced transcript amounts are shown in green color, genes with increased transcript amounts are shown in yellow and orange color.

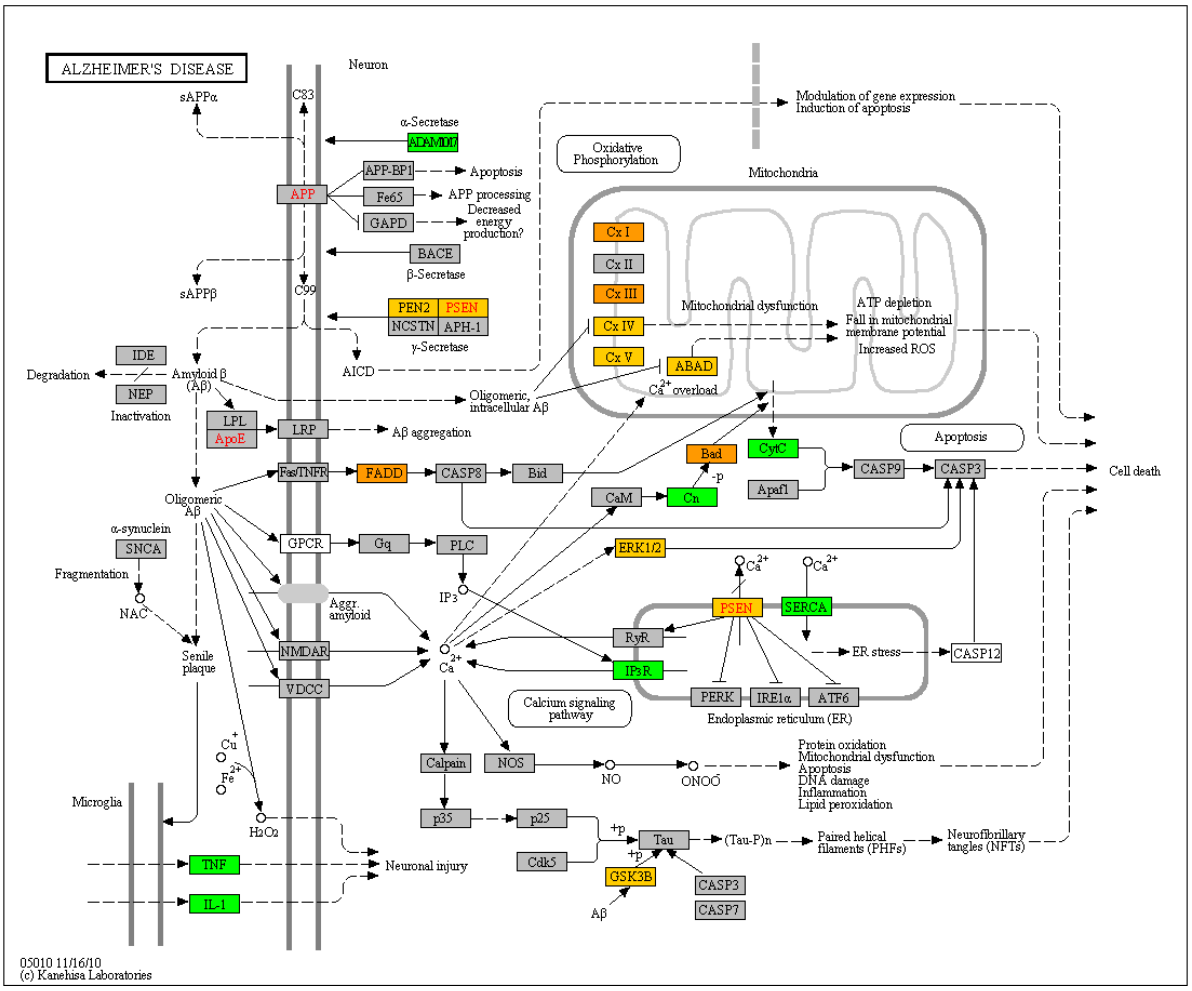

Figure S3. Significant gene expression changes in Alzheimer´s disease pathway identified in NCL4 patients´ leucocytes compare to controls**.** Genes with reduced transcript amounts are shown in green color, genes with increased transcript amounts are shown in yellow and orange color.

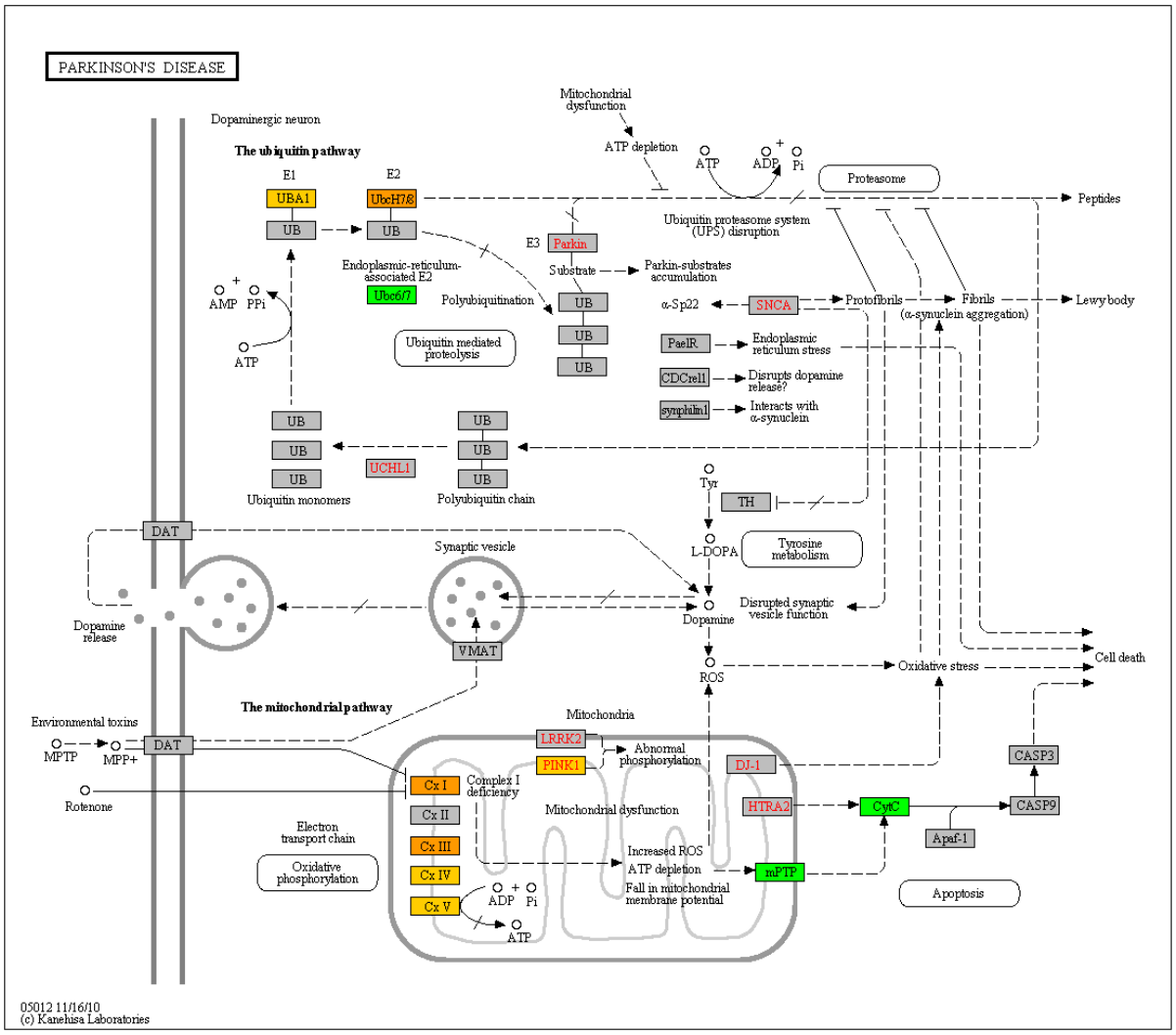

Figure S4. Significant gene expression changes in Parkinson´s disease pathway identified in NCL4 patients´ leucocytes compare to controls. Genes with reduced transcript amounts are shown in green color, genes with increased transcript amounts are shown in yellow and orange color.

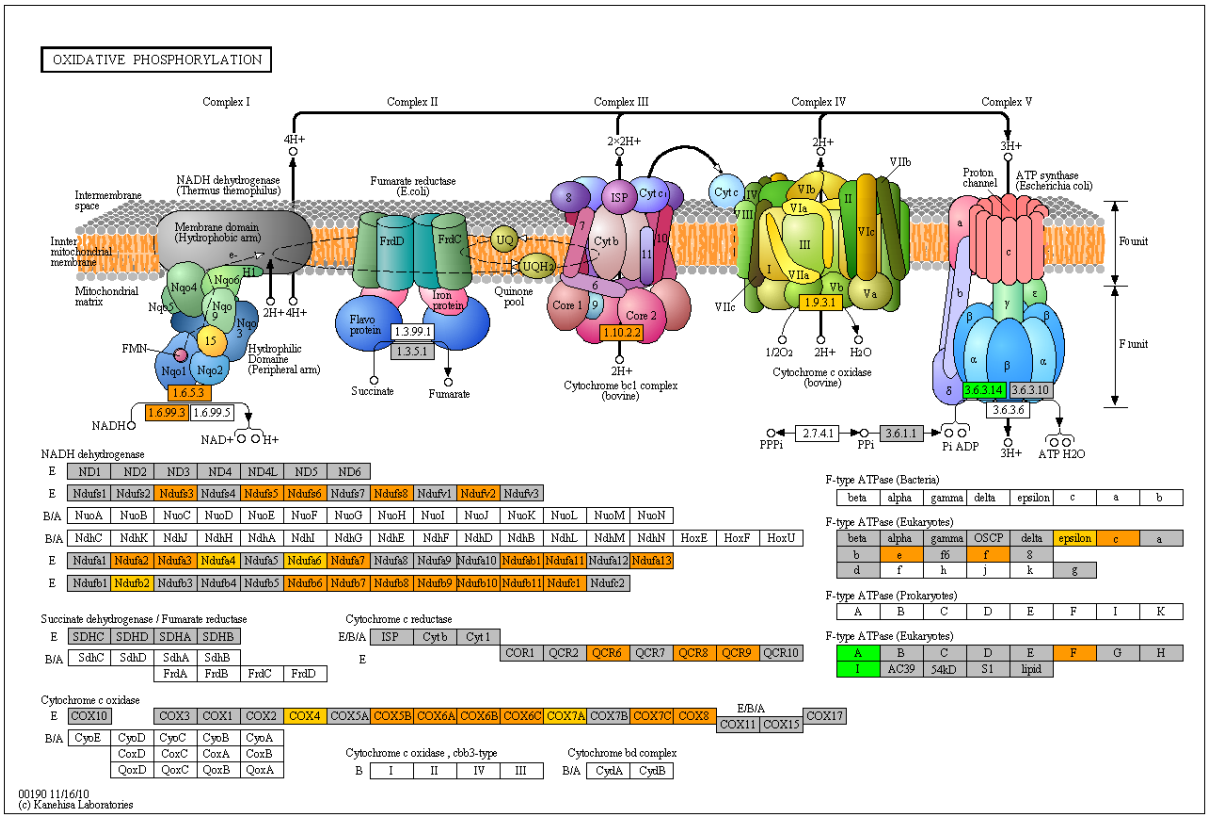

Figure S5. Significant gene expression changes in oxidative phosphorylation pathway identified in NCL4 patients´ leucocytes compare to controls. Genes with reduced transcript amounts are shown in green color, genes with increased transcript amounts are shown in yellow and orange color.

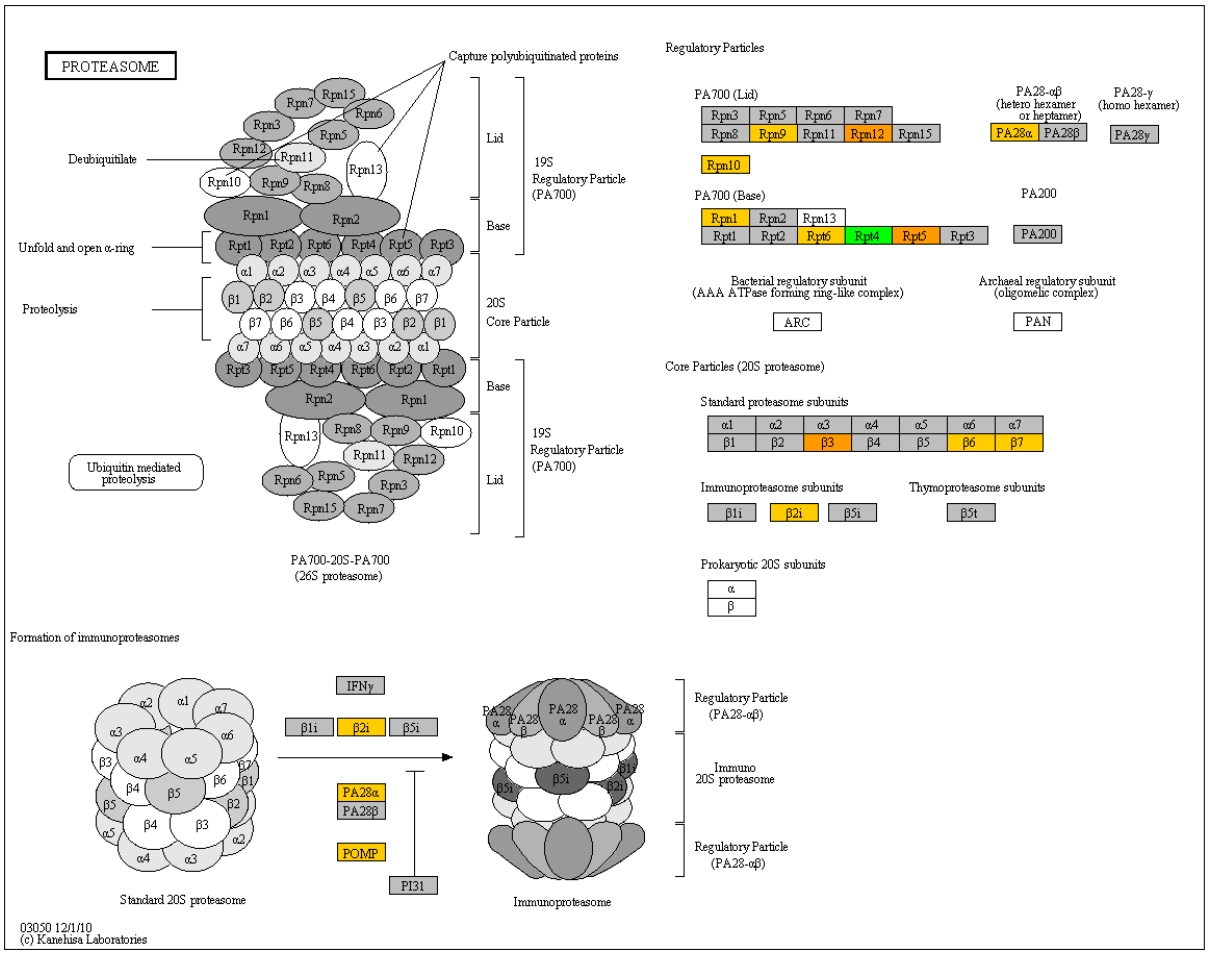

Figure S6. Significant gene expression changes in proteasome pathway identified in NCL4 patients´ leucocytes compare to controls**.** Genes with reduced transcript amounts are shown in green color, genes with increased transcript amounts are shown in yellow and orange color.

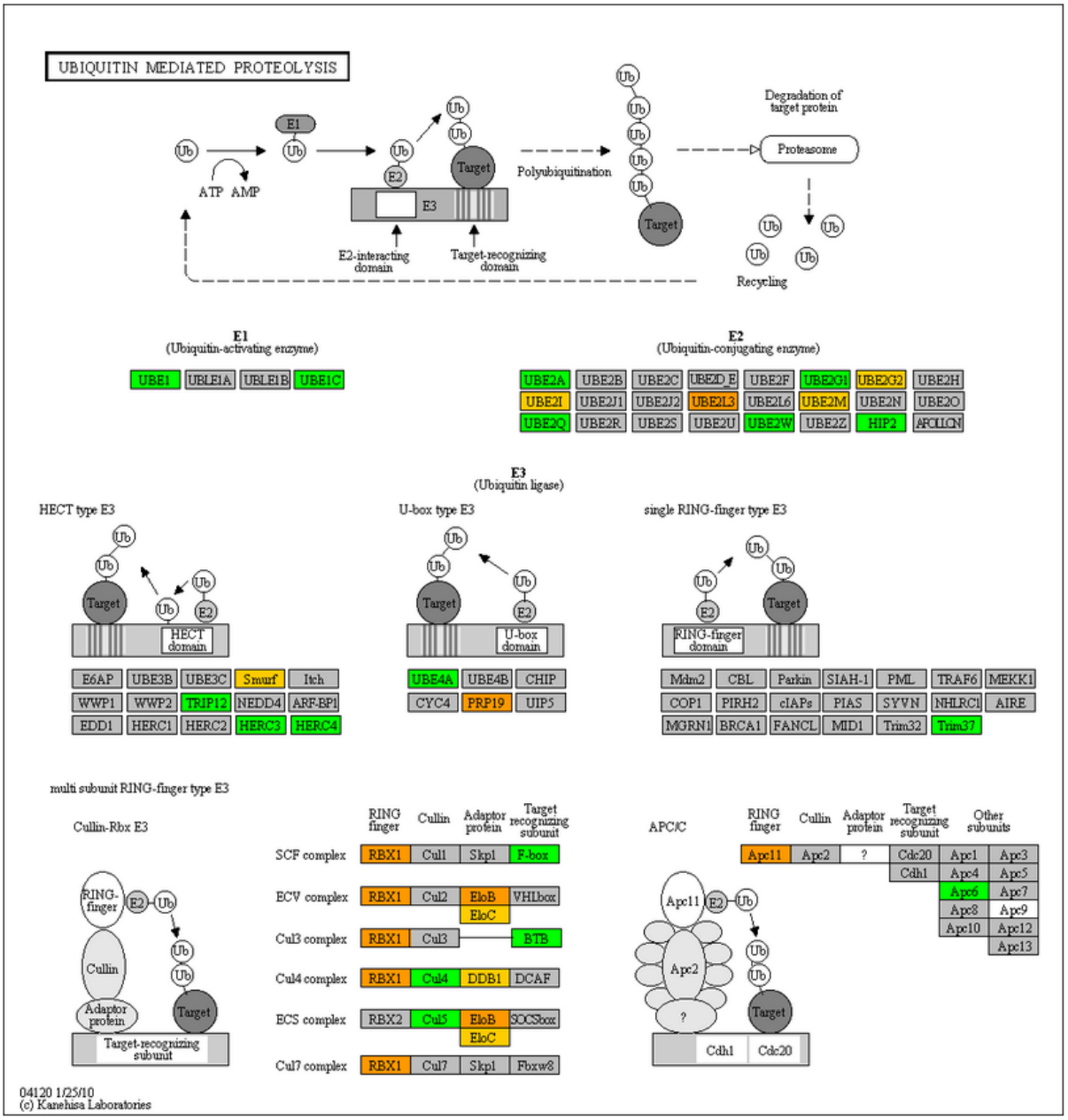

Figure S7. Significant gene expression changes in ubiquitin mediated proteolysis pathway identified in NCL4 patients´ leucocytes compare to controls. Genes with reduced transcript amounts are shown in green color, genes with increased transcript amounts are shown in yellow and orange color.

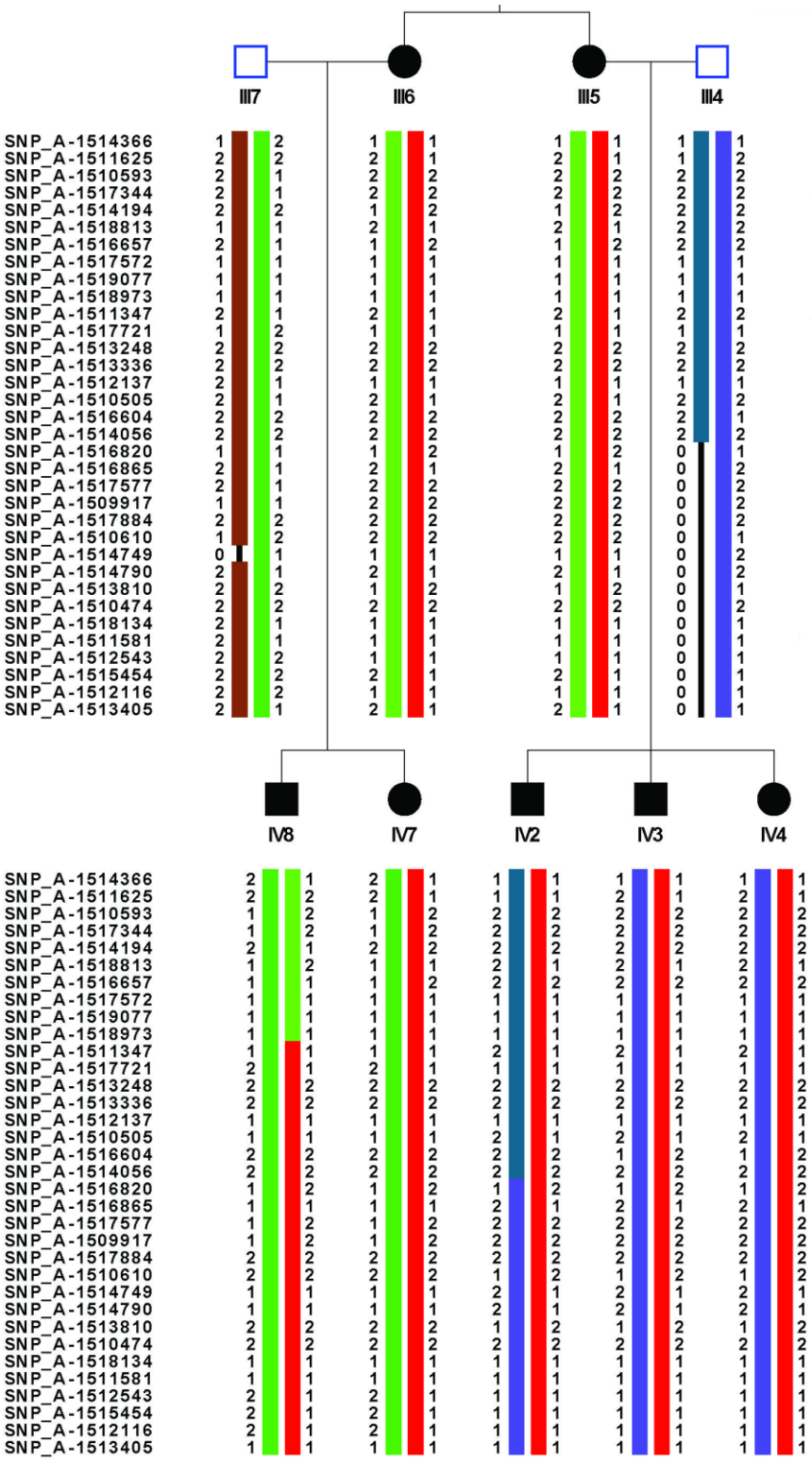

Figure S8. Haplotype analysis in family P1. Disease haplotype is shown in red.

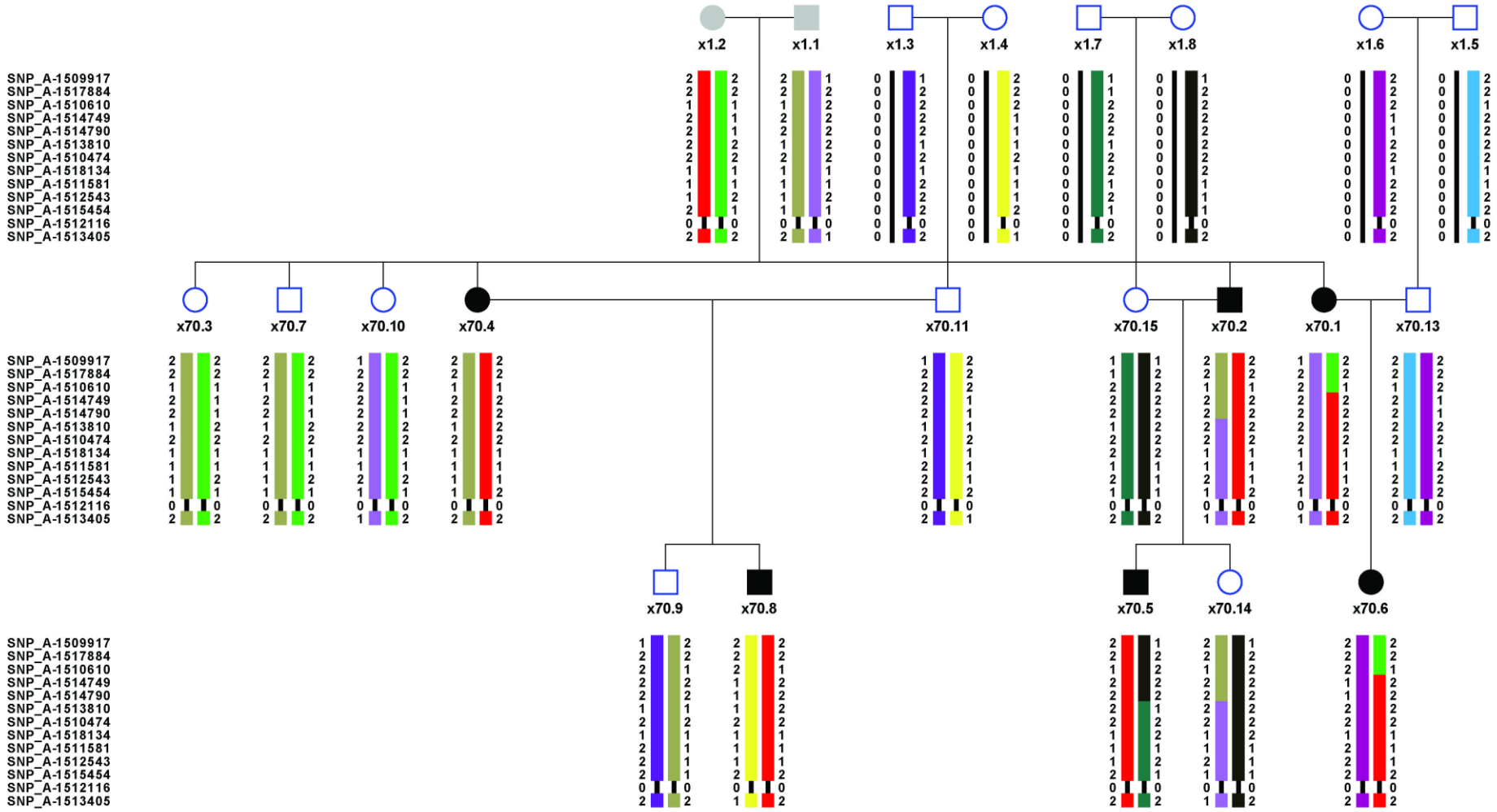

Figure S9. Haplotype analysis in family N1. Disease haplotype is shown in red.

Table S1. Oligonucleotides used in this study

name	sequence 5´- 3´	genomic position (NCBI36/hg18)
cDNAJC5_408U	GGCTCGCTGGGTCTCTACGTG	20:62031239-62031259
cDNAJC5_594L	GAACTCCGTCTCCTCGCCTTC	20:62032750-62032770
cDNAJC5_1205L	GAGGCCAAGACGGTAACACA	20:62033803-62033822
gDNAJC5_ex2_U	GCCGTATTCTGCCGTCTCAC	20:62029951-62029970
gDNAJC5_ex2_L	TCGGCCAGGATAAAGTATGT	20:62030338-62030357
gDNAJC5_ex3_U	cagccctggagagtcggaca	20:62030963-62030982
gDNAJC5_ex3_L	GGGAACCCTGCAGGCGTGGA	20:62031570-62031589
gDNAJC5_ex4_U	atccccacctggaacgcaccc	20:62032537-62032557
gDNAJC5_ex4_L	CCACAAACACTCGCGGCACA	20:62032920-62032939
gDNAJC5_ex5_U	TTTGTCCAGGTGCCCGAAAG	20:62033167-62033186
DNAJC5_clonU	AGATCTGCAGCTCAATCCGGAGCAGACCAGAGACAGCGCTCA	20:62030146-62030166
DNAJC5_mutU	TGTTTGTCTTCTGCGGCCGCCTCACGTGC	20:62032652-62032680
DNAJC5_mutL	GCACGTGAGGCGGCCGCAGAAGACAAACA	20:62032652-62032680
G_dnajc5_1U	TGGTTGTATTAACGTGGTTCA	20:61999720-61999740
G_dnajc5_1L	CCTCCCGGGTTCAAGCAATTC	20:62000549-62000571
G_dnajc5_2U	TCCGCGCGCTCCACATCAGTC	20:62003334-62003354
G_dnajc5_2L	ATTAGCTGGGTGTGGTGGCAC	20:62004314-62004335
G_dnajc5_3U	CCCGGCCAGAGTGTGTAGCTT	20:62016706-62016726
G_dnajc5_3L	TTTGTGGCTCAGGCGGGCATC	20:62018192-62018212
G_dnajc5_4U	AGTGGCCCTGAGGTGATGTAC	20:62018833-62018853
G_dnajc5_4L	TAAACACCATGATCCCGTCTC	20:62020346-62020366

Table S2. Differentially expressed genes located within the linked regions

chrom	Entrez_ Gene_ID	Symbol	logFC	t	P_Value	adj_P_Val
chr1	6894	*TARBP1*	-0.586627	-3.64393	0.0047467	0.0383828
chr1	51742	*ARID4B*	-0.554962	-4.08426	0.0023478	0.028611
chr1	9453	*GGPS1*	-0.346098	-4.14163	0.002146	0.027455
chr1	56605	*ERO1LB*	-0.498084	-4.02249	0.0025877	0.0299677
chr1	23596	*OPN3*	-0.536907	-3.36108	0.0075503	0.0485709
chr1	51029	*C1orf121*	-0.365811	-3.51221	0.0058859	0.0423882
chr1	64754	*SMYD3*	0.558983	3.52449	0.0057686	0.041944
chr1	114548	*CIAS1*	-1.63181	-8.0216	1.392E-05	0.009181
chr1	267002	*PGBD2*	-0.617904	-3.86248	0.0033368	0.0330816
chr4	1665	*DHX15*	-0.623651	-6.68464	6.354E-05	0.0122163
chr4	55300	*PI4K2B*	-0.578177	-3.85454	0.0033795	0.0332385
chr15	6727	*SRP14*	0.353975	4.72641	0.0008813	0.0205259
chr15	90427	*BMF*	0.577931	5.57842	0.000263	0.016211
chr15	27079	*RPUSD2*	0.869702	6.6699	6.469E-05	0.0122163
chr15	2644	*GCHFR*	0.943156	4.68449	0.0009378	0.0207719
chr15	57617	*VPS18*	0.522922	5.12038	0.0004974	0.0172756
chr15	54617	*INOC1*	0.298689	3.35625	0.0076108	0.0485709
chr15	64397	*ZFP106*	-0.577581	-3.87648	0.003263	0.0326602
chr15	55142	*CEP27*	0.763552	6.79623	5.554E-05	0.0122163
chr15	9836	*LCMT2*	-0.389645	-5.18778	0.000452	0.0170862
chr15	27229	*76P*	-0.34566	-3.32327	0.0080384	0.0497609
chr15	117155	*CATSPER2*	-0.449594	-4.63023	0.0010168	0.0217077
chr15	10169	*SERF2*	0.844664	4.84486	0.0007403	0.0190436
chr15	113201	*CASC4*	-0.471329	-5.04181	0.0005565	0.0181065
chr15	8669	*EIF3S1*	-0.669464	-5.38395	0.0003435	0.0167841
chr15	80208	*KIAA1840*	-0.489408	-4.2711	0.001755	0.0249412
chr15	84419	*C15orf48*	-1.00379	-5.4599	0.0003093	0.0167841
chr15	26258	*PLDN*	-0.61803	-3.96046	0.0028546	0.0309588
chr15	2585	*GALK2*	-0.377768	-3.33753	0.0078506	0.0493803
chr15	56986	*DTWD1*	-0.38996	-3.90736	0.0031061	0.0320475
chr15	3067	*HDC*	1.93225	5.46184	0.0003085	0.0167841
chr15	9101	*USP8*	-0.712025	-4.98783	0.0006015	0.0184777
chr15	123169	*LEO1*	-0.452781	-4.02522	0.0025766	0.0299677
chr15	5597	*MAPK6*	-0.572342	-5.39866	0.0003366	0.0167841
chr15	10681	*GNB5*	0.362483	3.5191	0.0058197	0.0421692
chr15	56204	*KIAA1370*	-0.440566	-3.39931	0.0070878	0.0470461
chr15	9488	*PIGB*	-0.293863	-3.42137	0.0068344	0.0462812
chr15	6938	*TCF12*	-0.594476	-4.39719	0.001446	0.0238422
chr15	102	*ADAM10*	-0.781431	-4.38946	0.0014631	0.0238422
chr15	79811	*SLTM*	-0.504002	-5.61362	0.0002508	0.0158943
chr15	10081	*PDCD7*	-0.695862	-5.06824	0.0005358	0.0179292
chr15	5315	*PKM2*	0.409672	3.61181	0.0050014	0.039213
chr15	27020	*SDFR1*	-0.546568	-3.81355	0.003609	0.0340672

chr15	84993	*UBL7*	0.365552	3.55659	0.0054732	0.0408625
chr15	10066	*SCAMP2*	0.348409	3.5509	0.0055244	0.0409346
chr15	192683	*SCAMP5*	-0.496168	-4.96956	0.0006175	0.0184777
chr15	25942	*SIN3A*	0.386199	3.77876	0.0038165	0.03493
chr15	92912	*UBE2Q2*	-0.413736	-3.92994	0.0029964	0.0315623
chr15	26263	*FBXO22*	-0.373887	-3.69416	0.0043752	0.0371348
chr15	3419	*IDH3A*	-0.378484	-3.47138	0.006294	0.0442492
chr20	57403	*RAB22A*	-0.464424	-3.60922	0.0050226	0.0392589
chr20	1522	*CTSZ*	0.553987	4.66462	0.000966	0.0211435
chr20	514	*ATP5E*	0.371021	3.68846	0.0044158	0.0372943
chr20	63939	*C20orf177*	-0.428789	-4.24836	0.0018178	0.0253549
chr20	284756	*FLJ33860*	-0.358376	-4.59126	0.0010779	0.0221719
chr20	6874	*TAF4*	-0.609952	-5.29906	0.0003866	0.0168807
chr20	10732	*TCFL5*	-0.538036	-4.2951	0.0016912	0.0247193
chr20	79144	*C20orf149*	0.498275	3.37364	0.007395	0.0479496
chr20	80331	*DNAJC5*	0.410616	4.25483	0.0017997	0.0252633
chr20	6919	*TCEA2*	0.491672	3.42533	0.0067899	0.0461504
chr20	55251	*PCMTD2*	-0.430018	-3.35866	0.0075806	0.0485709
chr22	27439	*CECR6*	0.540938	3.62324	0.0049092	0.0388177
chr22	55670	*PEX26*	0.586297	5.66054	0.0002354	0.0158943
chr22	29797	*DKFZp434K191*	0.778644	4.36833	0.0015112	0.0239865
chr22	8214	*DGCR6*	0.6811	4.20754	0.0019366	0.0261624
chr22	8220	*DGCR14*	0.40319	4.44663	0.001341	0.0232474
chr22	85359	*DGCR6L*	0.65933	3.8647	0.003325	0.033041
chr22	9342	*SNAP29*	-0.602557	-4.38882	0.0014646	0.0238422
chr22	7332	*UBE2L3*	0.614973	4.32883	0.0016056	0.0243146

Table S3. Homozygous haplotypes determined within the *DNAJC5* genomic region in probands from each of the family with *DNAJC5* mutation.

	Leu116del		Leu115Arg		
	P1	UCL519	N1	UCL563	UCL328
rs2065993	G/G	G/A	G/G	G/G	A/A
rs2247381	A/A	A/G	A/A	A/A	G/G
rs2427546	T/T	T/C	T/T	T/T	C/C
rs2427547	A/A	A/G	A/G	A/A	G/G
rs2427550	C/C	C/A	C/C	C/C	A/A
rs2427551	A/A	A/G	A/A	A/A	G/G
rs2427552	G/G	G/G	G/G	G/G	G/A
rs6011225	A/A	C/C	A/C	C/C	n/a
rs2427549	C/C	C/C	C/C	C/C	n/a
rs2427548	C/C	C/C	C/C	C/C	n/a
rs2427553	C/C	C/A	C/C	C/C	C/C
rs6062586	C/C	C/C	C/C	C/C	C/C
rs6122041	T/T	T/C	T/T	T/T	C/C
rs2427554	G/G	G/A	G/G	G/G	A/A
rs6011226	T/T	T/A	T/T	T/T	A/A

disconcordant homozygous genotypes
concordant homozygous genotypes
heterozygous genotypes