APPLIED AND ENVIRONMENTAL MICROBIOLOGY, Feb. 1992, p. 686–689
0099-2240/92/020686-04$02.00/0
Copyright © 1992, American Society for Microbiology
Vol. 58, No. 2

Disinfection of Drinking Water by Using a Novel Electrochemical Reactor Employing Carbon-Cloth Electrodes

TADASHI MATSUNAGA,* SATOSHI NAKASONO, TOSHIHIRO TAKAMUKU, J. GRANT BURGESS, NORIYUKI NAKAMURA, AND KOJI SODE

Department of Biotechnology, Tokyo University of Agriculture and Technology, Koganei, Tokyo 184, Japan

Received 26 July 1991/Accepted 25 November 1991

A novel electrochemical reactor employing carbon-cloth electrodes was constructed for disinfection of drinking water. *Escherichia coli* K-12 (10^2 cells per cm^3) was sterilized when a cell suspension was passed through the reactor at a dilution rate of 6.0 h^{-1}, and a potential of 0.7 V versus a saturated calomel electrode was applied to an electrode. The survival ratio increased with increasing dilution rate but was <0.1% at dilution rates of <6.0 h^{-1}. Although the survival ratio increased with increasing cell concentration above 10^3 cells per cm^3, the disinfection rate also increased. The disinfection rate was 6.0×10^2 cells per cm^3 per h at a cell concentration of 10^2 cells per cm^3. Continuous sterilization of *E. coli* cells was carried out for 24 h. Sterilization is based on an electrochemical reaction between the electrode and the cell which is mediated by intracellular coenzyme A. Sterilization of drinking water by using this reactor was successfully performed, demonstrating the potential of such a reactor for clean and efficient water purification.

Disinfection of drinking water is important for human health. Chlorine has generally been used for this purpose, and although this method is effective and cheap, it is unsuitable, since the chlorine has been found to react with a variety of organic impurities in water, converting them into carcinogens such as trihalomethane (6, 10). Such disinfection by-products, or their precursors, may be removed by using granular activated carbon as an adsorbent. However, this process is expensive and can result in bacterial growth on the granular activated carbon. These bacteria are resistant to many disinfection reagents (1, 2, 5, 11). The use of a powerful oxidant such as ozone or hydrogen peroxide, or a mixture of the two, does not produce hazardous by-products, but the potential of these oxidants is lower than that of chlorine (13).

Recently, we have reported that decreased respiratory activity and consequent cell death were induced when a constant potential of 0.74 V versus a saturated calomel electrode (SCE) was applied to microbial cells attached to an electrode surface (7, 8). Microbial cells were not ruptured after electrochemical treatment (4). This disinfection method is different from other electrochemical disinfection methods used to generate toxic substances (9, 12, 14) in that it is based on the electrochemical oxidation of intracellular coenzyme A (CoA). CoA is electrochemically and irreversibly converted to CoA dimer by disulfide bond formation (8). This method may therefore be useful for clean disinfection of drinking water since toxic substances and other organic substances are not produced. Electrochemical disinfection has so far only been carried out with basal-plane graphite electrodes, which have a small electrode surface area and are consequently unable to disinfect large numbers of bacteria (8). In this report, we describe the construction of a novel reactor for disinfection of drinking water that relies on the electrochemical dimerization of intracellular CoA. A carbon-cloth electrode has been used to increase the surface area upon which disinfection can take place. Optimization and characterization of the disinfection ability of this reactor are presented.

MATERIALS AND METHODS

Chemicals. Beef extract and peptone were purchased from Kyokuto Pharmaceutical Co., Tokyo, Japan. Other reagents were commercially available or laboratory-grade materials. Carbon-cloth was obtained from Tomoe Co., Ltd., Tokyo, Japan. Deionized water was used in all procedures.

Apparatus. Figure 1 shows a schematic diagram of the reactor system. Two sheets of carbon-cloth and two ion-exchange membranes were interwoven, rolled around a glass bar, and inserted into a glass tube. The end of the glass tube was closed with silicone rubber stoppers. To establish the input and output terminals, platinum wires were attached to each sheet of carbon-cloth. The effect of potential on the *Escherichia coli* survival ratio was examined by using a smaller glass tube reactor (diameter, 25 mm; length, 13 cm) which included a carbon-cloth (10 by 26 cm) and a glass bar (diameter, 8 mm; length, 10 cm). Other experiments were carried out with a glass tube (diameter, 25 mm; length, 50 cm), carbon-cloth (45 by 26 cm), and a glass bar (diameter, 8 mm; length, 45 cm). The SCE (model HC-205C; TOA Co., Tokyo, Japan) was located at the top of the glass tube. The electrochemical reactor system consisted of a glass tube containing two sheets of carbon-cloth and a glass bar, a peristaltic pump (model SJ-1211; ATTO Co., Tokyo, Japan), and a potentiostat (model HA-151; Hokuto Denko).

Culture of microorganisms. *E. coli* K-12 (ATCC 10798) was used as a model microorganism for disinfection studies. *E. coli* cells were cultured aerobically at 37°C for 12 h in 100 ml of nutrient broth, 1 g of beef extract, 1 g of peptone, and 0.5 g of sodium chloride (pH 7.2) per 100 ml. The cells were centrifuged at 8,000 × *g* for 5 min, washed, and suspended in sterilized water at a defined cell concentration. Measurement of cell concentration was done with a hemacytometer.

Disinfection procedure. Cell suspensions containing various cell concentrations were passed through the reactor. A constant potential was applied to the carbon-cloth electrode. An SCE was used as a reference electrode. A second

* Corresponding author.

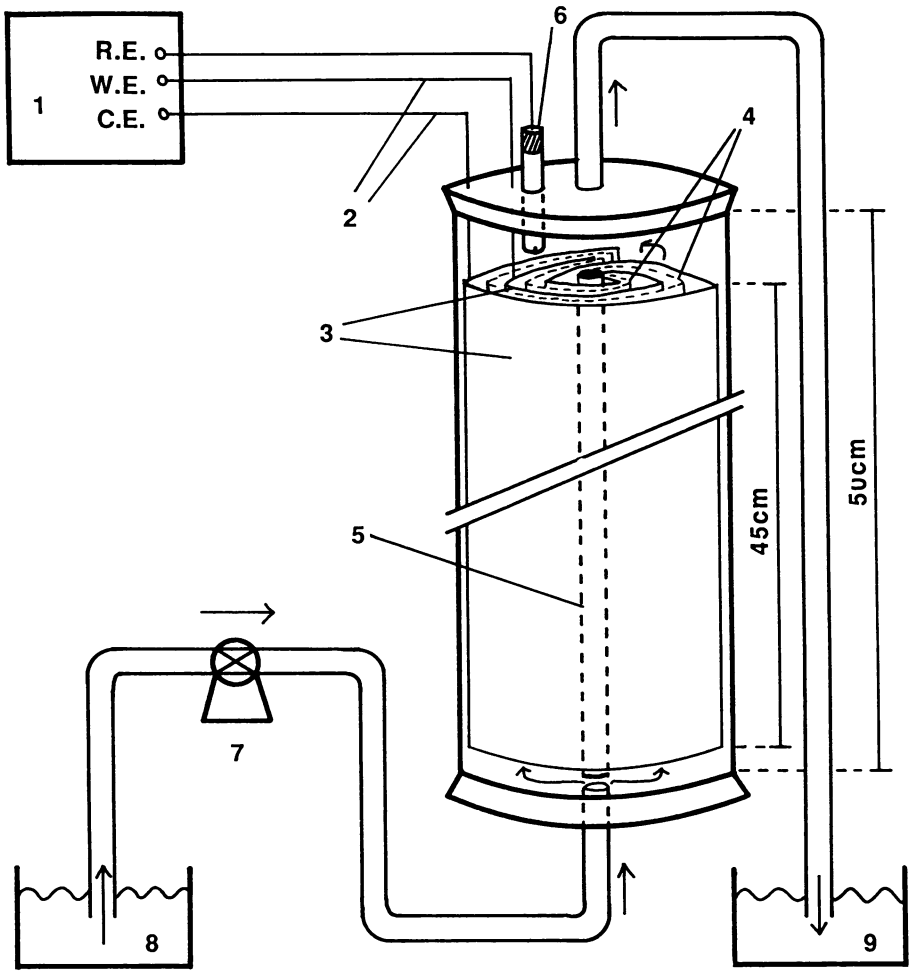

FIG. 1. Schematic diagram of electrochemical sterilization reactor. 1, potentiostat; 2, platinum wire; 3, carbon-cloth electrode; 4, ion-exchange membrane; 5, glass bar; 6, SCE; 7, peristaltic pump; 8, sampling water containing bacteria; 9, treated water; W.E., working electrode; R.E., reference electrode; C.E., counterelectrode.

carbon-cloth electrode was used as a counterelectrode. All procedures were carried out at room temperature.

Measurement of viable cells. The number of viable cells in the treated water was determined by plating the sample on nutrient agar plates at appropriate dilutions and counting colonies which appeared after 24 h of incubation at 37°C. The following variables were used: N_a, viable cell number after treatment; N_b, viable cell number before treatment; C_a, viable cell concentration after treatment (cells per cubic centimeter); C_b, viable cell concentration before treatment (cells per cubic centimeter); V_r, reactor volume (cubic centimeters); F, flow rate (cubic centimeters per hour); R_s, survival ratio (percent); R_d, disinfection rate (cells per cubic centimeter per hour). Survival ratio was defined as $R_s = (N_a/N_b) \times 100$. Disinfection rate was defined as $R_d = [F(C_b - C_a)]/V_r$.

RESULTS

Disinfection by the electrochemical reactor by using carbon-cloth electrodes. The effect of incubation time on the survival ratio of *E. coli* is shown in Fig. 2. The survival ratio decreased rapidly with time. After 10 min, *E. coli* was killed to <2% survival using the carbon-cloth electrode. Disinfec-

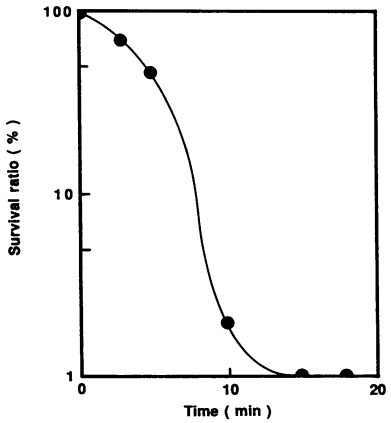

FIG. 2. Effect of incubation time on survival ratio of *E. coli* at an applied potential of 0.7 V versus an SCE. A cell suspension containing 10^2 cells per cm^3 was incubated in the electrochemical reactor.

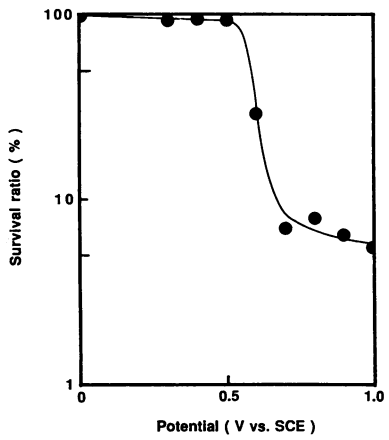

FIG. 3. Effect of potential on survival ratio of *E. coli*. A cell suspension containing 10^2 cells per cm^3 was passed through the electrochemical reactor at a dilution rate of 6.0 h^{-1} (mean residence time, 10 min).

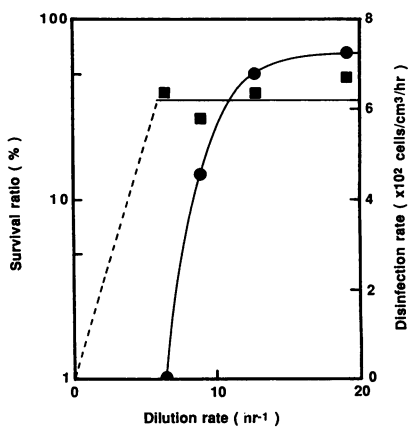

FIG. 4. Effect of dilution rate on survival ratio (●) and disinfection rate (■) of *E. coli*. A cell suspension containing 10^2 cells per cm^3 was passed through the electrochemical reactor, and a constant potential of 0.7 V versus an SCE was applied to the system.

tion tests were usually run three times and were reproducible with an average relative error of 10% when 10^2 cells per ml of bacterial suspension were used. Therefore, a dilution rate of 6 h^{-1}, which gave a mean residence time of 10 min, was used for further experiments.

The effect of potential on the survival ratio is shown in Fig. 3. The survival ratio decreased gradually with increasing potential up to 0.5 V versus SCE. Above 0.6 V versus an SCE, the survival ratio decreased sharply. *E. coli* was killed to <5% survival when constant potentials of >0.7 V versus an SCE were applied.

It is also plausible that, at 0.6 to 0.7 V versus an SCE, electrolysis of ions resulting in production of various oxidants could occur; these oxidants would function as disinfectants. To study the production of disinfectants, a graphite electrode (surface area, 0.17 cm^2) was used with a counterelectrode (platinum wire), a reference electrode, and a membrane filter (0.45-μm pore size; 0.17 cm^2 of nitrocellulose) for retaining the microbial cells. A cell suspension (10^7 cells) of *E. coli* was dropped onto a membrane filter with slight suction, and the cells were fixed on the graphite electrode. Constant potentials of 0.6 and 0.7 V versus an SCE were applied to the graphite electrode for 10 min. As a result, the numbers of viable cells decreased to 45 and 5%, respectively. When the surface of the graphite electrode was covered with a dialysis membrane to prevent direct contact between the cells and the electrode, the numbers of viable cells did not decrease at 0.6 and 0.7 V versus an SCE. These results indicate that the decrease in viable cell numbers at 0.6 and 0.7 V versus an SCE is due to a direct electron transfer between *E. coli* cells and the graphite electrode. The pH of the solution around the graphite electrode did not change. Addition of catalase, albumin, and cysteine did not change the numbers of viable cells. These results also demonstrate the absence of any bactericidal effect due to toxic substances such as H_2O_2, free radicals, and other disinfectants formed by electrolysis. Similar experiments were carried out with a carbon-cloth electrode. The buffer solution was electrolyzed at 0.6 and 0.7 V versus an SCE, removed from the carbon-cloth electrode system, and added to a suspension of *E. coli*. However, the number of viable cells did not decrease after incubation at room temperature for 30 min, showing that *E. coli* cells also were unaffected by the electrolyzed buffer solution. The *E. coli* suspension was electrolyzed at 0.6 and 0.7 V versus an SCE with catalase, albumin, and cysteine. Addition of these compounds did not increase the viable cell numbers.

Reduction in viable cell number in treated water occurs because of electrostatic adsorption of cells onto carbon-cloth electrodes (3). Consequently, we also examined cell adsorption to the reactor. A cell suspension containing 10^4 cells per cm^3 was incubated in the reactor for 10 min, and the number of cells recovered was determined with a hemacytometer. When the reactor was operated at a potential of 0.7 V versus an SCE, about 10% of the cells were adsorbed onto the carbon-cloth electrode. The percentage of cells adsorbed was constant and did not depend on the applied potential, indicating that cell adsorption has little effect on the estimated survival ratio of *E. coli* (Fig. 3).

Optimization of electrochemical disinfection. The effect of dilution rate on survival ratio and disinfection rate was examined (Fig. 4). The survival ratio increased with increasing dilution rate and was <0.1% at dilution rates of <6.0 h^{-1}. Therefore, when the mean residence time was >10 min, the survival ratio was <0.1%, correlating with the data shown in Fig. 2. The disinfection rate was a constant maximum of 6.0 × 10^2 cells per cm^3 per h at dilution rates of between 6.0 and 18.0 h^{-1} and at a cell concentration of 10^2 cells per cm^3.

The survival ratio and disinfection rate when the cell concentration was varied are shown in Fig. 5. The survival ratio was <0.1% when cell suspensions of <10^2 cells per cm^3 were used. The survival ratio increased with increasing cell concentration of >10^3 cells per cm^3. The disinfection rate also increased with cell concentration.

Continuous sterilization of *E. coli* was also carried out with the electrochemical reactor, using carbon-cloth electrodes. A cell suspension (10^2 cells per cm^3) was passed through the reactor at a dilution rate of 6.0 h^{-1}, and a constant potential of 0.7 V versus an SCE was applied to the reactor. For 24 h of operation, no decrease in the disinfection rate (6.0 × 10^2 cells per cm^3 per h) was observed, and water sterilization was achieved.

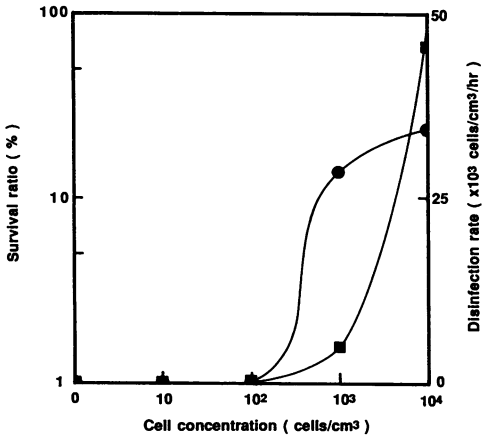

FIG. 5. Effect of cell concentration on survival ratio (●) and disinfection rate (■) of *E. coli*. The various cell suspensions were passed through the electrochemical reactor at a dilution rate of 6.0 h^{-1} (mean residence time, 10 min), and a constant potential of 0.7 V versus an SCE was applied to the system.

DISCUSSION

Above 0.6 V versus an SCE, the survival ratio of *E. coli* decreased sharply. This is due to the electrochemical oxidation of intracellular CoA, which leads to decreased respiration and consequent cell death. Carbon-cloth consisting of carbon fibers woven into a 0.4-mm-thick material was used to investigate electrochemical disinfection. In microelectrode experiments, only cells attached to the microelectrode were electrochemically killed, whereas cells not attached to the microelectrode were unaffected. Therefore, electrochemical disinfection is based on direct oxidation of intracellular CoA and not on generation of disinfectants by electrochemical oxidation (4).

Continuous disinfection of water by using a carbon-cloth electrochemical reactor was demonstrated. *E. coli* cells, 10^2 per cm^3, were killed at 0.7 V versus an SCE and at a dilution rate of $<6.0\ h^{-1}$. A dilution rate of $<6.0\ h^{-1}$ is equal to a mean residence time of >10 min, which should be enough to allow contact between cell and electrode. The disinfection rate may be increased by increasing the probability of contact between cell and electrode. A reduced mean residence time will consequently decrease the possibility of cell and electrode contact. At constant dilution rates and cell concentrations, this can be achieved by increasing the electrode surface area or by improving the mixing dynamics in the reactor. Since the concentration of bacterial cells in tap water is generally 10^2 cells per cm^3, the disinfection ability of the reactor described here is sufficient for domestic use.

In this work, we have used *E. coli* as a model microorganism for optimization of disinfection. Since the principle of disinfection is based on electrochemical oxidation of intracellular CoA (4, 7, 8), we were also able to disinfect other gram-negative bacteria, gram-positive bacteria, and yeasts by using a graphite electrode at a potential of 0.7 V versus an SCE (data not shown). Therefore, it appears that this reactor can be used for general disinfection of drinking water. Furthermore, disinfected bacteria were not adsorbed onto the electrode surface, allowing continuous disinfection of drinking water. This is the first demonstration of the efficient disinfection of drinking water by using an electrochemical reactor which relies on the electrochemical oxidation of bacterial intracellular CoA. Nonbacterial pathogens such as viruses, protozoan cysts, and parasitic worms may also occur in drinking water. The carbon-cloth electrode system has not been used with these nonbacterial pathogens. Additional separation systems may be required for providing safe drinking water. This experimental scale reactor is capable of treating 5 cm^3 of water per reactor per min. In future work, by improving liquid mixing in the reactor, higher throughput should be possible.

REFERENCES

1. **Berman, D., E. W. Rice, and J. C. Hoff.** 1988. Inactivation of particle-associated coliforms by chlorine and monochloramine. Appl. Environ. Microbiol. **54:**507–512.
2. **Camper, A. K., M. W. LeChevallier, S. C. Broadaway, and G. A. McFeters.** 1986. Bacteria associated with granular activated particles in drinking water. Appl. Environ. Microbiol. **52:**434–438.
3. **Golub, D., E. Ben-Hur, Y. Oren, and A. Soffer.** 1987. Electroadsorption of bacteria on porous carbon and graphite electrode. Bioelectrochem. Bioenerg. **17:**175–182.
4. **Kitajima, Y., A. Shigematsu, N. Nakamura, and T. Matsunaga.** 1988. Electrochemical sterilization using carbonfiber microelectrode. Denki Kagaku **52:**1082–1085.
5. **LeChevallier, M. W., C. D. Cawthon, and R. G. Lee.** 1988. Inactivation of biofilm bacteria. Appl. Environ. Microbiol. **54:**2492–2499.
6. **Ling, J. T.** 1976. Research—key to quality water supply in the 1980s. J. Am. Water Works Assoc. **68:**659–661.
7. **Matsunaga, T., and Y. Namba.** 1984. Detection of microbial cells by cyclic-voltammetry. Anal. Chem. **56:**798–801.
8. **Matsunaga, T., Y. Namba, and T. Nakajima.** 1985. Electrochemical sterilization of microbial cells. Bioelectrochem. Bioenerg. **13:**393–400.
9. **Patermarakis, G., and E. Fountoukidis.** 1990. Disinfection of water by electrochemical treatment. Water Res. **12:**1491–1496.
10. **Rook, J. J.** 1974. Formation of haloforms during chlorination of natural waters. Water Treat. Exam. **23:**234–243.
11. **Stewart, M. H., R. L. Wolfe, and E. G. Means.** 1990. Assessment of the bacteriological activity associated with granular activated carbon treatment of drinking water. Appl. Environ. Microbiol. **54:**2492–2499.
12. **Stoner, G. E., G. L. Cahen, Jr., M. Sachyani, and E. Gileadi.** 1982. The mechanism of low frequency a.c. electrochemical disinfection. Bioelectrochem. Bioenerg. **9:**229–243.
13. **Wolfe, R. L., M. H. Stewart, S. Liang, and M. J. McGuire.** 1989. Disinfection of model indicator organisms in a drinking water pilot plant by using PEROXONE. Appl. Environ. Microbiol. **55:**2230–2241.
14. **Yamagishi, Y., M. Watanabe, and T. Katsunuma.** 1988. Bactericidal effect of electrolysis. J. Antibact. Antifung. Agents **16:**323–328.