Am. J. Hum. Genet. 54:852–863, 1994

Huntington Disease without CAG Expansion: Phenocopies or Errors in Assignment?

Susan E. Andrew,* Y. Paul Goldberg,* Berry Kremer,* Ferdinando Squitieri,* Jane Theilmann,* Jutta Zeisler,* Håkan Telenius,* Shelin Adam,* Elisabeth Almquist,† Maria Anvret,‡ Gerard Lucotte,§ A. Jon Stoessl,|| Giuseppe Campanella,# and Michael R. Hayden*

*Department of Medical Genetics, University of British Columbia, Vancouver; †Department of Geriatric Medicine, Karolinska Institute, and ‡Department of Clinical Genetics, Karolinska Hospital, Stockholm; §Centre Regionale de Neurogenetique, Hôpital Robert Debre, Reims; ||Department of Clinical Neurological Sciences, University Hospital, London; and #2nd Clinica Neurologica, University of Naples, Naples

Summary

Huntington disease (HD) has been shown to be associated with an expanded CAG repeat within a novel gene on 4p16.3 (IT15). A total of 30 of 1,022 affected persons (2.9% of our cohort) did not have an expanded CAG in the disease range. The reasons for not observing expansion in affected individuals are important for determining the sensitivity of using repeat length both for diagnosis of affected patients and for predictive testing programs and may have biological relevance for the understanding of the molecular mechanism underlying HD. Here we show that the majority (18) of the individuals with normal sized alleles represent misdiagnosis, sample mix-up, or clerical error. The remaining 12 patients represent possible phenocopies for HD. In at least four cases, family studies of these phenocopies excluded 4p16.3 as the region responsible for the phenotype. Mutations in the HD gene that are other than CAG expansion have not been excluded for the remaining eight cases; however, in as many as seven of these persons, retrospective review of these patients' clinical features identified characteristics not typical for HD. This study shows that on rare occasions mutations in other, as-yet-undefined genes can present with a clinical phenotype very similar to that of HD.

Introduction

Huntington disease (HD) usually presents in mid adult life, with a progressive movement disorder and personality changes accompanied by cognitive decline and relentless progression to death ~18 years after onset of the symptoms (Hayden 1981; Harper 1991). The discovery of a novel gene containing a trinucleotide repeat that is expanded on HD chromosomes (Huntington's Disease Collaborative Research Group 1993) has significant implications for both (*a*) confirmation of diagnosis of HD in someone presenting with signs and symptoms and (*b*) predictive testing programs.

We and others have shown that there is a highly significant association between trinucleotide repeat length and age at onset of HD (Andrew et al. 1993; Duyao et al. 1993; Norremolle et al. 1993; Snell et al. 1993; Stine et al. 1993; Telenius et al. 1993; Zuhlke et al. 1993). A significant association is also seen between trinucleotide length and age at death, a more definitive time point than age at onset, but not with the type of clinical presentation, such as chorea, psychiatric disturbance, dementia, or rigidity (Andrew et al. 1993). Previous methods for the determination of trinucleotide length used primers that flank both the CAG and the adjacent CCG trinucleotide repeats (Andrew et al. 1993; Duyao et al. 1993; Goldberg et al. 1993; Huntington's Disease Collaborative Research Group 1993; Riess et al. 1993; Snell et al. 1993; Telenius et al. 1993). However, recently we and others have demonstrated that the adjacent CCG, in addition to the CAG repeat,

Received November 17, 1993; accepted for publication January 26, 1994.

Address for correspondence and reprints: Dr. Michael R. Hayden, Department of Medical Genetics, University of British Columbia, 416-2125 East Mall, NCE Building, Vancouver, BC V6T 1Z4, Canada.

© 1994 by The American Society of Human Genetics. All rights reserved.

0002-9297/94/5405-0015$02.00

shows variation on normal human chromosomes (Rubensztein et al. 1993; Andrew et al. 1994), which, in certain instances, should be taken into account when CAG repeat length is estimated.

The prior reports of the relationship between trinucleotide repeat length and clinical features of HD each described a small number of persons who had been given the diagnosis of HD but who were found not to have CAG repeat sizes in the range seen in affected persons (Andrew et al. 1993; Duyao et al. 1993; Snell et al. 1993). Accurate assessment of the reasons for the failure to demonstrate expanded CAG repeats in those persons diagnosed with HD is critical in determining the sensitivity of CAG repeat length for the diagnosis of HD in symptomatic patients. Furthermore, this is also important for predictive testing programs, where the detection of CAG repeat length in the normal range could be mistaken as absolute proof that the person at risk will not develop signs and symptoms consistent with the phenotype of HD.

We have assessed a total of 1,022 individuals from 573 families who were given the diagnosis of HD and for whom DNA was available for analysis. We show that a total of 30 (2.9%) persons did not have expansion of the CAG repeat in the affected range. Almost two-thirds (i.e., 18 [1.8% of the total sample]) of these 30 patients were accounted for by either errors involving misdiagnosis, sample mix-up, or clerical errors. The rest (12 patients, representing 1.2% of the total sample) constitute a group of persons from families representing possible phenocopies for HD for which no other clinical diagnosis has been made.

We provide detailed clinical histories concerning these potential phenocopies and show that phenocopies for HD do exist. In eight patients, mutations elsewhere in the HD gene (IT15) could not be excluded. However, in three familes, representing 4 of the 12 cases, haplotype analysis has excluded the HD gene and surrounding genes as the site for the mutation causing this phenotype. Our results suggest that, on very rare occasions, genetic heterogeneity may underlie the presentation of the HD-like clinical phenotype.

Table 1

Reasons for Diagnosis of HD without expansion of the CAG Repeat Triplet (<37 Repeats) in 1,022 Affected Patients

	No. (%)
Possible phenocopies:	
Family history of neurological disease	8 (.8)
CAG expansion in other family members	1 (.1)
New mutations	3 (.3)
Total	12 (1.2)
Errors in assignments:	
Misdiagnosis	10 (1.0)
Sample mix-up	6 (.6)
Clerical error	2 (.2)
Total	18 (1.8)

Methods

DNA Analysis

Genomic DNA was isolated by extraction from leukocytes by standard procedures (Kunkel et al. 1977). PCR amplification of the HD CAG repeat was performed as described elsewhere (Andrew et al. 1993; Goldberg et al. 1993). PCR amplification of the CAG trinucleotide repeat on chromosome 12, which was associated with dentato-rubro-pallido-luysian atrophy (DRPLA), was performed essentially as described elsewhere (Nagafuchi et al. 1994). Haplotypes were constructed using polymorphic markers at loci D4S127 (Taylor et al. 1992), D4S95 (Wasmuth et al. 1988), D4S227 (Weber et al. 1992*a*), and D4S133 (Andrew et al. 1992), as well as the polymorphic CCG repeat adjacent to the CAG (Andrew et al. 1994).

HD Patient Evaluation

All the DNA used was stored in the HD DNA bank in Vancouver. All patients had been given a clinical diagnosis of HD by clinicians in different parts of Canada and in other countries. Clinical details were based on extensive records documenting neurological examination and special investigations such as computerized tomography, positron-emission tomography, and autopsy records. In all instances, patient records were reviewed by us, and there was further discussion with the referring physician where appropriate. Repeat PCR assessment was performed for those individuals without expanded CAG alleles, by using both the initial DNA sample and, when available (7 of 30 cases), a second independently obtained sample.

Results

In 30 of 1,022 persons who had been given the diagnosis of HD, CAG repeat lengths were in the range of those seen in normal human chromosomes (10–30 repeats) (tables 1–3). The ranges of CAG repeat length in affected persons of different ethnic groups and ancestries are included in a separate report (Kremer et al.,

Table 2

Possible Phenocopies

Patient	Allele Sizes (kb) PCR 1	Repeat PCR 1	New Sample[a]	Classification	Family History of Neurological Disease?	Comments
1	16, 18	16, 18	NA	Phenocopy	Yes	Sib of 2
2	16, 18	16, 18	NA	Phenocopy	Yes	Sib of 1
3	17, 20	17, 20	17, 20	Phenocopy	Yes	Cousin of 4, autopsy of affected parent shows caudate atrophy
4	16, 19	16, 19	16, 19	Phenocopy	Yes	Cousin of 3, autopsy of affected parent shows caudate atrophy
5	17, 18	17, 18	NA	Phenocopy	Yes	Recombinant, described elsewhere (Weber et al. 1992b)
6	18, 19	18, 19	NA	Phenocopy	Yes	Four persons with CAG expansion in family (Robbins et al. 1989; Pritchard et al. 1992; Duyao et al. 1993)
7	19, 20	19, 20	NA	Phenocopy	Yes	Sib of 8
8	19, 20	19, 20	NA	Phenocopy	Yes	Sib of 7
9	17, 21	17, 21	NA	Phenocopy	Possible	
10	15, 21	15, 21	NA	Phenocopy/new mutation	No	Typical features of HD, normal PET
11	17, 19	17, 19	NA	Phenocopy/new mutation	No	
12	16, 16	16, 16	16, 16	Phenocopy/new mutation	No	Typical features of HD, confirmed by CAT and PET

[a] NA = second DNA sample not available.

submitted). The most common reasons for the failure to detect CAG expansion in persons with supposed HD were errors in assignment (18 persons), including misdiagnosis (10 persons); sample mix-up (6 persons); and clerical error (2 persons)(table 1).

Errors in Assignment

Human error accounted for eight of these misclassifications (tables 1 and 3). In two cases, the persons were at risk for HD but were entered, on the computer, as "affected." In six individuals, sample mix-up occurred prior to assessment of the CAG repeat length. This may have occurred at any point from the time of blood withdrawal until the time of assessment of CAG repeat length. PCR reassessment of additional blood samples revealed that three of these six persons had CAG repeat sizes in the range seen in the affected persons. In another instance where an additional DNA sample was unavailable, detailed assessment of the family with other highly polymorphic markers in the region revealed that the blood sample analyzed was highly unlikely to have been derived from this patient. In two cases, DNA from an unaffected family member was mistaken for DNA from the affected patient in that family and represented sample mix-up.

Misdiagnosis of HD represented a significant cause (10 persons [1.0% of the total sample]) for the finding of two normal alleles in persons with a presumed phenotype of HD (tables 1 and 3). In seven instances (patients 13–19; fig. 4), patients from families with established HD who had behavioral, psychiatric, or minor motor disturbances were incorrectly diagnosed as having HD. It is noteworthy that in one instance (patient 17) an initial neuropathological examination also confirmed the diagnosis of HD. However, a second assessment, prior to knowledge of CAG repeat length, clearly indicated that the pathological findings were not consistent with HD. It was noted that the positive family history of HD might have influenced the first neuropathological assessment. In one instance (patient 20), a patient with dementia as the only presenting feature in the absence of a positive family history of HD was diagnosed as suffering from HD. One patient (patient 15; fig. 4) had a tremor and a gait ataxia that was likely due to chronic alcohol intake; in another patient (patient 22), dementia associated with tardive dyskinesia was in-

Table 3

Errors of Assignment

Patient	Allele Sizes (kb) PCR 1	Repeat PCR 1	New Sample[a]	Classification	Family History of Neurological Disease?	Comments
13	14, 21	14, 21	NA	Misdiagnosis	Yes	One person with CAG expansion in family, behavior disturbance misdiagnosed as juvenile HD
14	17, 17	17, 17	NA	Misdiagnosis	Yes	Two persons with CAG expansion in family, minor motor abnormalities
15	16, 17	16, 17	NA	Misdiagnosis	Yes	Alcoholic, psychiatric disturbance
16	16, 20	16, 20	NA	Misdiagnosis	Yes	Four persons with CAG expansion in family
17	18, 22	18, 22	NA	Misdiagnosis	Yes	Three persons with CAG expansion in family, neuropathological misdiagnosis of HD
18	17, 20	17, 20	NA	Misdiagnosis	Yes	Two persons with CAG expansion in family, psychiatric disturbance
19	17, 28	17, 28	NA	Misdiagnosis	Yes	Dementia, probable Alzheimer disease
20	19, 19	19, 19	NA	Misdiagnosis	No	Alzheimer disease confirmed by autopsy
21	19, 20	19, 20	NA	Misdiagnosis	No	No caudate atrophy (CAT 14 years after diagnosis)
22	18, 21	18, 21	NA	Misdiagnosis	No	Progressive dementia and tardive dyskinesia, previous haloperidol use
23	17, 28	17, 28	NA	Sample mix-up	Yes	Mix-up with at-risk child
24	20, 22	20, 22	NA	Sample mix-up	Yes	Mix-up with unaffected sib
25	16, 17	16, 17	19, 44	Sample mix-up	Yes	One person with CAG expansion in family
26	19, 19	19, 19	17, 40	Sample mix-up	Yes	Two persons with CAG expansion in family
27	16, 20	16, 20	16, 43	Sample mix-up	Yes	One person with CAG expansion in family
28	19, 20	19, 20	NA	Sample mix-up	Yes	Two persons with CAG expansion in family, haplotypes show sample mix-up
29	11, 16	ND	NA	Clerical error	Yes	Unaffected individual
30	17, 19	17, 19	17, 19	Clerical error	Yes	Individual at risk

[a] NA = second DNA sample not available; and ND = not done.

duced by neuroleptic drugs. Pertinent details from case histories from these patients are presented below to emphasize the possibility that, because of a previously established history of HD in a particular family, other neurological signs and symptoms may be misdiagnosed as HD.

Absence of CAG Expansion in Individuals from Families with CAG Expansion in Other Affected Persons

Ten persons who had affected family members with CAG expansion and who had clinical signs that strongly raised the possibility of the diagnosis for HD were shown not to have CAG repeat expansion. In four of these instances (patients 25–28; table 3), sample mix-up accounted for these findings. In one instance (patient 6; table 2 and fig. 2), in a family that has been described in detail on three previous occasions (Robbins et al. 1989; Pritchard et al. 1992; Duyao et al. 1993), two CAG alleles within the normal range were detected. In five instances (patients 13, 14, and 16–18; table 3 and fig. 4), persons from a family with proved HD who had minor motor abnormalities or behavioral disturbances were misdiagnosed as having HD.

Possible Phenocopies

Pedigrees of families with possible phenocopies are shown in figures 1–4. Haplotypes were constructed for potential phenocopies with a family history of supposed HD (patients 1–4) (figs. 1 and 2). Haplotypes for patients 5 and 6 have been determined elsewhere (Robbins et al. 1989; Pritchard et al. 1992; Weber et al. 1992*b*).

A total of nine persons from six different families had a positive family history of a progressive neurological disorder associated with intellectual decline, chorea, and personality change (tables 1 and 2). In two in-

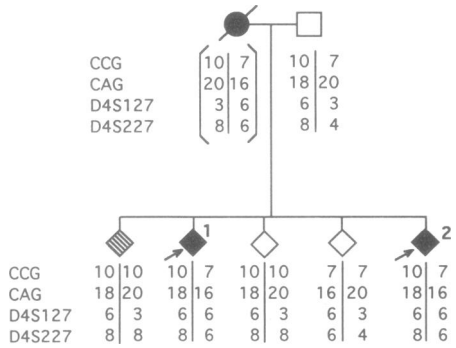

Figure 1 Pedigree for patients 1 and 2 (indicated by arrows), including haplotypes showing that each received identical parental chromosomes. The eldest sibling (indicated by the hatched symbol), with parental alleles different than those of patients 1 and 2, shows possible early signs of HD (shown hatched), which, if confirmed in the future as HD, would exclude this region of chromosome 4 as being responsible for the phenotype in this family.

stances, affected individuals were siblings (figs. 1 and 3, pedigree C); in another instance, the two affected persons were first cousins (fig. 2). Haplotype analysis with six markers in one family (fig. 2) demonstrated that two affected individuals (patient 3 and 4) had not inherited

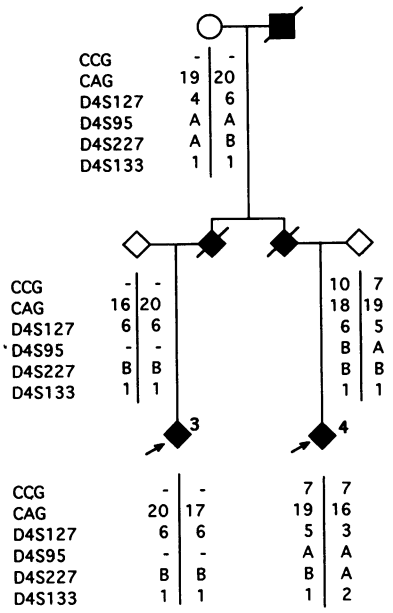

Figure 2 Pedigree for patients 3 and 4 (indicated by arrows), including haplotypes at six markers and showing that patients 3 and 4 have inherited different chromosomes 4 from their affected parents, which excludes this region of chromosome 4 as being responsible for the phenotype in this family.

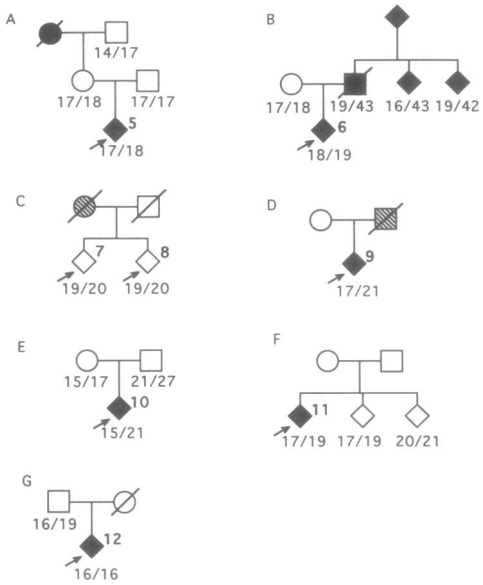

Figure 3 Pedigrees for patients 5–12 (possible phenocopies A–G), with CAG repeat sizes shown beneath each individual tested. Patients are numbered and marked with arrows.

the same chromosome 4 in this region and that, therefore, the cause for the HD phenotype in this family was unlikely to be a gene in this region of chromosome 4. Haplotype analysis in the family of patients 1 and 2 (fig. 1) shows that both affected persons share identical haplotypes. An older sibling with two different parental alleles demonstrates possible early signs of HD. If, in the future, this individual is definitively diagnosed as having HD, then 4p16.3 can be excluded as the site responsible for this phenotype in this particular family. Similarly, patient 6, from a family described elsewhere (Robbins et al. 1989; Pritchard et al. 1992; Duyao et al. 1993), does not share 4p16.3 markers with one affected sibling and other second-degree relatives who demonstrate CAG expansion. In another patient described elsewhere (patient 5; fig. 3) (Weber et al. 1992*b*), DNA marker analysis had indicated that the mutation associated with HD was distal to the region containing the HD gene. This would indicate that mutations in other genes, outside this region of chromosome 4p16.3, are likely to be associated with a clinical phenotype very similar to HD.

Specific Case Histories of Possible Phenocopies

Patients 1 and 2 (table 2 and fig. 1).—The mother and uncle of patients 1 and 2 were diagnosed as suffering from HD, with onset at age 38 and 35 years, respec-

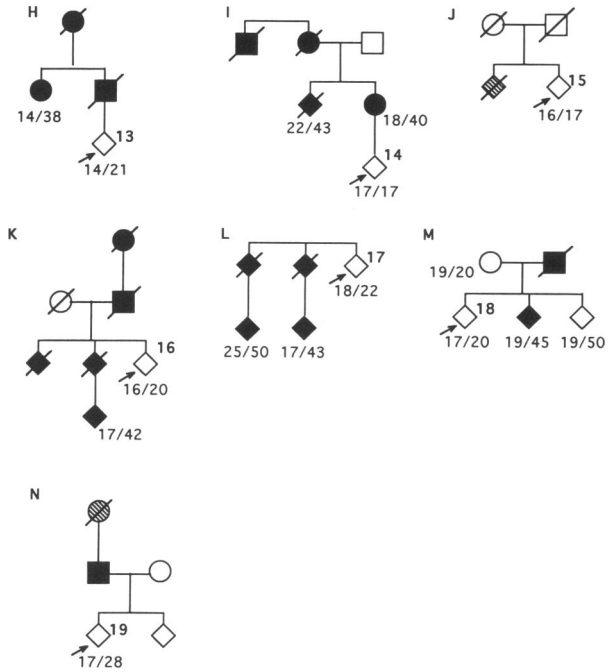

Figure 4 Pedigrees for patients 13–19 (possible phenocopies H–N), who represent misdiagnoses with family histories of HD. CAG repeat sizes are shown beneath each individual tested. Patients are numbered and marked with arrows.

tively. Patient 1 reported suffering from involuntary movements and gait problems since the age of 22 years. A neurological examination at age 32 years revealed eye-movement abnormalities, with slowing of saccades, increased latency of initiation, and jerky pursuit. Dysarthria with motor impersistence of the tongue, as well as choreic movements in all limbs, the face, the neck, and the trunk, were present. Muscle tone was decreased, and some bilateral dysmetria could be evoked on finger-nose testing. Cognitive decline and symptoms of depression were evident. The diagnosis of HD was made by a neurologist.

Patient 2, the sib of patient 1, had noticed clumsiness, gait problems, and involuntary movements since age 28 years. On neurological examination at age 30 years, he displayed slowed ocular saccades with interruptions, jerky pursuit, and slowing of the saccadic phase of the optokinetic nystagmus, as well as motor impersistence of the tongue. Choreic movements of all limbs and of axial muscles were intermittently superseded by dystonic posturing. The tendon reflexes were brisk and symmetrical. There was obvious cognitive deterioration and depression. The diagnosis of HD was made. On review now, two features call into question the diagnosis of HD. First, the progression of the illness has been slower than that normally associated with early-onset HD. Second, after not detecting CAG expansion, we requested a computed axial tomography (CAT) scan for each patient, which revealed cerebellar atrophy in both but no obvious evidence of striatal atrophy.

Patients 3 and 4 (table 2 and fig. 2).—Patient 3 was treated for depression at age 23 years, and 1 year later severe cognitive impairment was noted and an electroencephalogram (EEG) showed diffuse abnormalities. In the following years her dementia progressed, accompanied by behavioral problems. At age 30 years, involuntary movements in the limbs were noted and her gait became progressively unstable. Three years later her course was further complicated by convulsions. A CAT scan at that time revealed ventricular enlargement. Obvious choreic movements became evident only at approximately age 36 years. Currently, at age 41 years, she is mute and rigid.

The mother of patient 3 experienced a personality change and cognitive decline at age 30 years. This was associated with a masklike facies, progressive bradykinesia, and dysarthria, but without tremor. A progressive dementia accompanied by behavioral disturbances was noted. Gait ataxia was evident 3 years after onset of HD, and she progressively lost weight despite attempts at adequate nutrition. Epileptic seizures occurred at age 39 years, and choreic movements, described as violent and jerky, were noted specifically at age 42 years. The diagnosis of HD was made. The patient died 13 years after onset of the illness, and neuropathological examination revealed diffuse cortical and basal ganglia atrophy, with neuronal cell loss throughout all cortical layers, the caudate nucleus, and the pallidum. This was associated with only mild gliosis. These findings were compatible with, but not pathognomonic of, HD.

Patient 4, who is the cousin of patient 3, had onset of both cognitive impairment and depression at age 30 years. On examination, there was no evidence of chorea or other neurological deficit. Two years later, cognitive impairment had worsened, accompanied by severe dysarthria and deterioration of fine motor skills.

The mother of patient 4 (aunt of patient 3) showed signs and symptoms of depression since age 28 years. Two years later she complained of slurred speech and impaired coordination. Neuropsychological testing showed a generalized cognitive impairment. Pneumoencephalography revealed mild generalized ventricular dilatation and generalized atrophy, while the EEG

displayed diffuse abnormalities. Her course was progressive, and at age 32 years her gait was unsteady, resulting in frequent falling. At age 35 years choreiform movements developed, while speech had deteriorated further. The decline in cognition paralleled the motor abnormalities. She was also given the diagnosis of HD. She suffered from epileptic convulsions at age 42 years, and the involuntary movements continued to worsen until death, 1 year later. Pathological examination revealed a brain weight of 950 g and a total body weight of only 27 kg. Inspection of the brain showed diffuse symmetric atrophy, particularly of the frontal and the occipital cortex, and only moderate reduction of the caudate nuclei. Microscopic examination of the basal ganglia revealed small areas with extensive neuronal degeneration, with some gliosis.

The maternal grandfather of patients 3 and 4 showed restlessness, nervousness, and personality change since age 41 years, and 2 years later he was diagnosed as having Parkinson disease. His course was characterized by a progressive gait instability, and he ultimately became severely rigid. Progressive dementia, with delusions of poisoning, became more prominent, while persistent choreiform movements of the fingers were noted at age 45 years. The autopsy showed obvious cortical atrophy, dilatation of the lateral ventricles, and diffuse gliosis of the basal ganglia.

In this family, all affected persons were given the diagnosis of HD. The clinical features are compatible with HD but have some atypical features, including both the late onset of chorea in the course of the illness and the presence of epilepsy.

Patients 5 and 6 (table 2 and fig. 3, pedigrees A and B).—Patient 5 (Weber et al. 1992*b*) and patient 6 (Robbins et al. 1989; Pritchard et al. 1992; Duyao et al. 1993) have been described in detail elsewhere. It is noteworthy that we have recently learned that the course of the illness in patient 6 has been atypical for HD, in view of its slow progression. While one affected sibling and other second-degree relatives have CAG expansion in the affected range, three members of this sibship who previously had been diagnosed as having HD do not show CAG expansion (R. M. Myers, personal communication).

Patients 7 and 8 (table 2 and fig. 3, pedigree C).—The mother of patient 8 was diagnosed with schizophrenia, and her sib (patient 7) had progressive chorea and dementia. At age 50 years the insidious onset of gait ataxia, dysarthria, and memory impairment were noted. Over the next 10 years, her symptoms were slowly progressive. On examination at age 60 years, she had intermittent mild choreic movements of all limbs but was not grossly ataxic. She had impaired ocular saccades and difficulty with smooth ocular pursuit. Cognitive function was impaired. A positron-emission tomography (PET) scan showed findings of decreased uptake of glucose within the caudate nucleus, compatible with HD. However, a magnetic-resonance-imaging (MRI) scan revealed prominent cerebellar atrophy. A CAT scan showed mild cortical atrophy, and the lateral and third ventricles were slightly enlarged. A diagnosis of HD was made, although, in view of the cerebellar findings, DRPLA was considered. This patient's sibling (patient 7) had a similar clinical course and died ~18 years after time of onset. The recent identification of expansion of a CAG trinucleotide repeat within a novel gene on chromosome 12 in DRPLA patients (Koide et al. 1994; Nagafuchi et al. 1994) allowed for testing of these two patients. However, in the DRPLA gene, neither patient had CAG repeat expansion outside the normal range (7–23 repeats) (data not shown).

Patient 9 (table 2 and fig. 3, pedigree D).—This patient's father was institutionalized, reportedly because of "general paralysis," and died in a mental institution at age 39 years. The proband reported clumsiness from age 36 years, and there was a history of depressive episodes. On neurological examination at age 41 years, horizontal saccades were slowed, and she could not suppress associated head movements during lateral gaze. Rapid movements of tongue, hands, and fingers were slowed, and a gait ataxia was evident. Furthermore, there were obvious choreic movements of her face, neck, trunk, and limbs. CAT and ^{18}F-deoxyglucose PET scans failed to reveal signs of caudate atrophy or hypometabolism, and there were no acanthocytes in her peripheral smear. While the clinical phenotype and natural history of the illness were compatible with the diagnosis of HD, the normal PET scan did not support this diagnosis (Hayden et al. 1986).

Patient 10 (table 2 and fig. 3, pedigree E).—There was no history of neurological impairment in this family. At approximately age 33 years, involuntary movements began, accompanied by depressive symptoms for which the patient received medication. On examination at age 36 years, he made a few errors on delayed recall, and his speech was slightly dysarthric, while choreic movements of the limbs were present, sometimes interrupted by dystonic posturing. A CAT scan 3 years after onset did not show signs of caudate atrophy, while a PET scan at that time showed normal striatal glucose metabolism, not supporting the clinical diagnosis of HD.

Patient 11 (table 2 and fig. 3, pedigree F).—The parents of this person died in their 80s, unaffected with HD, and no other affected family members are known. The illness began at age 50 years, with two major episodes of depression. Two years later, a movement disorder started with clumsiness and gait ataxia associated with the development of chorea. Neuropsychological examination at age 60 years revealed impairment of short-term and spatial memory and an inability to copy geometrical figures from memory. The patient had no acanthocytes in the peripheral smear. The CAT scan showed some ventricular enlargement and widened sulci, while pallidal hypointensity was observed on T2 weighted MRI images. These features are compatible with the clinical diagnosis of HD.

Patient 12 (table 2 and fig. 3, pedigree G).—This patient's parents did not show any signs or symptoms of neurological illness at ages 55 and 81 years. At age 44 years the patients began to notice restlessness and involuntary movements, and, according to his spouse, he became more irritable. On neurological examination at age 45 years, he displayed problems with delayed recall, as well as with concentration. Saccadic intrusions occurred during smooth-pursuit eye movements, while there were motor impersistence of the tongue and inability to perform complex facial movements. Choreic movements were present in the face and in all four extremities. A CAT scan showed bilateral caudate atrophy, as well as some cerebellar atrophy. A PET scan showed obvious striatal hypometabolism. Over the next 6 years, his involuntary movements gradually worsened, necessitating halperidol therapy. His gait deteriorated, his speech became increasingly dysarthric, and he required major assistance in performing functions of daily life. The phenotype is typical of HD.

Case Histories for Affected Persons Who Represented Errors in Assignment

Patient 13 (table 3 and fig. 4, pedigree H).—At age 10 years this patient, whose father was affected with HD, was diagnosed as having HD, because of retarded speech development, learning problems in school, lability of mood, facial grimacing, occasional jerking movements of the head and shoulders, and choreic hand movements. At that time, neuropsychological testing showed a normal IQ of 97 (verbal, 95; performance, 100), unchanged from a test performed 6 mo previously. After a 12th-grade education and various manual jobs, at age 25 years she still displayed facial grimacing, motor impersistence of the tongue, and an enhanced physiological tremor of the hands, but no chorea. There was no indication of any intellectual decline. Because of the absence of any deterioration over 15 years, the diagnosis of HD was rescinded.

Patient 14 (table 3 and fig. 4, pedigree I).—This patient's mother was from a family with neuropathologically proved HD and demonstrated CAG expansion. At age 22 years, although the patient was asymptomatic, a neurological examination revealed saccadic intrusions in the smooth eye movements, with mild impairments in rapid voluntary movements, and very mild, occasional involuntary movements of the hands and fingers. No signs of cognitive impairment were found. The diagnosis of HD was suspected. A CAT scan was normal, and the PET scan did not demonstrate any striatal hypometabolism of glucose. He has had no progression of any problems over 3 years, and the diagnosis of HD has been rescinded.

Patient 15 (table 3 and fig. 4, pedigree J).—Patient 15 was an alcoholic who had been in and out of psychiatric hospitals for much of his adult life. The diagnosis of HD was made on the basis of (1) his personality disorder and (2) the fact that his brother had been previously diagnosed with HD at age 59 years, because of abnormal movements and dementia. No DNA from this sibling was available for analysis. Currently, the diagnosis of HD in the brother of patient 15 is also in question, as he has had periods of cerebral anoxia secondary to heart block, which could account for his symptoms.

Patient 16 (table 3 and fig. 4, pedigree K).—Patient 16 came from a large family with a known history of HD. DNA analysis of affected family members revealed CAG expansion. At age 67 years, the patient complained of decreased memory, depression, and nervousness. He had mild generalized chorea at rest, which was accentuated during voluntary movements. Ocular pursuit movements were disrupted, and saccades were slow. On the basis of his family history, psychiatric difficulties, and physical exam, he was diagnosed as having HD; however, normal PET scans and lack of progression of disease have now put the diagnosis in question.

Patient 17 (table 3 and fig. 4, pedigree L).—Patient 17 is from a family with a known history of HD. He did not manifest any movement disorder, but, with advanced age, he complained of impaired intellect and loss of memory. Autopsy of this patient showed gross atrophy of caudate and putamen and a marked reduction in the ratio of small to large neurons in the neostriatum. However, not in keeping with the diagnosis of HD, the number of senile plaques in the neocortex exceeded the number expected for age, suggesting the

diagnosis of Alzheimer disease. In this instance it was suggested that, by virtue of the positive family history, the pathologist was biased in favor of the diagnosis of HD.

Patient 18 (table 3 and fig. 4, pedigree M).—Patient 18 is from a family with a known history of HD, including a niece with juvenile onset. He had a history of alcoholism, and after periods of depression at age 40 years and an attempted suicide he was diagnosed with HD, on the basis of the family history of the disorder and psychiatric disturbance, but he had no neurological signs or symptoms.

Patient 19 (table 3 and fig. 4, pedigree N).—The father of this patient, as well as his grandmother, suffered from a slowly progressive, dementing disease, which was diagnosed as HD. The proband, at age 43 years, reported short-temperedness and clumsiness for ~5 years. Neurological examination showed slowed saccades, slight slurring in speech, and inability to perform rapidly alternating movements of the tongue or the hands. He had hypokinesia, but no choreic movements were seen. A detailed neuropsychological examination revealed general cognitive slowing, as well as visual/spatial impairment. Although the full scale IQ (94) was in the normal range, the discrepancy between verbal (109) and performance (78) scores was pathologically large. A CAT scan failed to demonstrate caudate atrophy, while a PET scan revealed normal uptake of glucose in the striatum; both results are inconsistent with the diagnosis of HD.

Patients 20–22 (table 3 and fig. 4).—Patients 20–22 had no family history of HD. Patient 20 had severe choreiform movements and mental deterioration and was initially diagnosed as having HD. However, the brain pathology at autopsy (presence of neuritic plaques and neurofibrillary tangles and no caudate atrophy) was consistent with a diagnosis of Alzheimer disease. Patient 21 had no mental deterioration but was diagnosed as having HD because of her movement disorder. A CAT scan 14 years after diagnosis showed no atrophy of the caudate, and slow progression of symptoms made the diagnosis of HD unlikely. Patient 22 had tardive dyskinesia and progressive dementia initially attributed to HD. However, the patient also had a history of alcoholism and haloperidol use, making the diagnosis of HD unlikely.

Discussion

The cardinal finding of this study of 1,022 HD affected persons from 573 families is that 2.9% of persons (n=30) with the diagnosis of HD had CAG repeat sizes within the normal range. After careful investigation, 18 of these persons were found to represent misclassifications, including misdiagnosis, sample mix-up or clerical error, while 12 affected persons represent possible phenocopies.

We recognize that the assignment of a case as misdiagnosis or phenocopy could be arbitrary. In this analysis, however, the distinction was based on whether an alternative diagnosis was made because the patient had a clinical and a neuropathological phenotype more suggestive of other known disorders, such as benign hereditary chorea, DRPLA, inherited ataxia, neuroacanthocytosis, or Alzheimer disease. Those patients with a phenotype similar to HD who do not fulfill criteria for these other known disorders and who do not have CAG expansion in the HD gene may therefore represent previously undescribed HD-like disorders. We classify these patients as potential phenocopies for HD.

Clinical misdiagnosis is not rare in HD families, accounting for 10 misclassifications in this cohort (1.0% of the total sample). Previously, it has clearly been demonstrated that patients with HD may often be misdiagnosed as suffering from other illnesses, including schizophrenia and Alzheimer disease (Hayden 1981; Harper 1991). This study shows that misdiagnoses of neurological and psychiatric symptoms as HD, in families with a positive family history of HD, are also a significant source of error. Such misdiagnoses are particularly serious in view of the far-reaching genetic implications of this disorder. This reinforces the need for caution before attributing all neuropsychiatric symptoms as HD in a family that has a positive history of this illness.

In families where there is a history of neuropsychiatric illness in other relatives that is consistent with an autosomal dominant mode of inheritance, the absence of CAG expansion in the HD gene does not exclude the possibility that the person at risk will not manifest similar signs and symptoms. This clearly highlights the need to include, where possible, in all analyses of at-risk persons, DNA from an affected person, which will facilitate more accurate genetic counseling. If the affected relative has CAG expansion and the person at risk does not, this would be reassuring, in suggesting that the person at risk will not develop signs and symptoms of HD. However, if the affected person does not show CAG expansion in the HD gene, this might mean that there is another neurogenetic disorder in this family. Reassurance of the person at risk without CAG expansion that he or she would not develop signs and symp-

toms of a similar disorder would not be possible in this situation.

In DRPLA, the clinical phenotype may very closely parallel HD (Naito and Oyanagi 1982; Iizuka et al. 1984; Iizuka and Hirayama 1986). These two illnesses may, however, be differentiated by careful neuropathological examination, where the major involvement of the globus pallidus, subthalamic nucleus, and dentate nuclei in DRPLA distinguish it from HD (Naito and Oyanagi 1982; Iizuka et al. 1984; Iizuka and Hirayama 1986). Furthermore, assessment for CAG expansion in two different novel genes will now definitively allow differentiation between these two disorders (Huntington's Disease Collaborative Research Group 1993; Koide et al. 1994; Nagafuchi et al. 1994). Recently, expansion of a trinucleotide repeat (CAG) on chromosome 12 was shown to be associated with DRPLA (Koide et al. 1994; Nagafuchi et al. 1994). The assessment of CAG expansion in patients 1–22 demonstrated that all had CAG lengths within the normal range (7–23 repeats) within this gene, suggesting that none of the misdiagnoses or phenocopies in this series can be classified as DRPLA caused by this gene.

Administrative or human error accounted for eight misclassifications (0.8% of the total sample) in this series: sample mix-up accounted for the absence of detecting trinucleotide repeat expansion in six persons (0.6% of the total sample) in the series, while clerical errors accounted for two misclassifications (0.2% of the total sample). This stresses the importance of obtaining, where possible, additional samples for reassessment of persons who have signs and symptoms compatible with the diagnosis of HD but who do not manifest CAG repeat expansion, prior to concluding that they do not have repeat expansion. This potential error remains, despite the definitive methods for predictive testing.

After misassignments due to misdiagnosis, sample mix-up, and clerical error are taken into account, only 12 persons from nine families represented possible phenocopies (table 1). Of these 12 phenocopies, 3 represented sporadic cases of HD, 8 had a family history of a progressive neurological illness, and in 1 the family history was not confirmed. In three families in which assessment was possible (patients 3–6; figs. 2 and 3), segregation analysis indicated that other mutations in the HD gene (IT15) leading to this phenotype are unlikely and that genetic heterogeneity underlies this phenotype. The genetic cause for the phenotype similar to HD in these instances has, in all likelihood, been mapped outside the HD gene. In eight patients (patients 1, 2, and 7–12; figs. 1–3) from six families, the possibility that another mutation—i.e., other than CAG expansion—in the HD gene is responsible for the HD phenotype has not been excluded. It is noteworthy, however, that, on retrospective review of 11 of 12 patients (patients 1–11), certain clinical features raised questions about the clinical diagnosis of HD. These features included absence of expected progression and failure to see characteristic changes on CAT or PET scan after many years of illness.

In families with demonstrated typical CAG expansion, there were initially 10 patients who did not show expansion. Sample mix-up accounted for four of these cases (patients 25–28), incorrect diagnosis was assigned in five cases (patients 13, 14, and 16–18; fig. 4), and the remaining patient (patient 6) represents a possible phenocopy for HD. Clearly, misdiagnosis or sample mix-up is the most likely explanation for the failure to detect CAG expansion in symptomatic persons who have affected relatives with CAG expansion in the HD gene. Recent studies in our laboratory indicate that, while somatic mosaicism is evident in HD, major differences in CAG repeat size do not occur in different tissues, except in persons with juvenile onset, and cannot be invoked to account for the clinical presence of normal CAG size in a patient from a family in which other members have a demonstrated CAG expansion (Telenius et al., in press).

These findings have significant implications for the understanding of the pathogenesis of HD. It would indicate that other mutational mechanisms, besides CAG expansion, that result in alteration of this gene rarely, if ever, lead to this phenotype. In our series of 1,022 patients, a total of 30 persons (2.9%) given the clinical diagnosis of HD did not have expansion of the CAG repeat. The majority (1.8% of the total sample) of these cases were errors of assignment. After extensive investigation, a total of 12 persons (1.2% of the total sample), at the maximum, represent possible phenocopies for HD. It is likely that, in most instances, these patients come from families with HD-like disorders but have some clinical features atypical for HD. In at least four cases from three families, family studies excluded mutations within the HD gene (IT15) as being responsible for this phenotype. These results suggest that on rare occasions nonallelic genetic heterogeneity may underlie the presentation of an HD-like phenotype.

Acknowledgments

We appreciate the clinical details and DNA samples provided by our colleagues and members of the Canadian HD

Collaborative Group on predictive testing. This work is supported by the MRC (Canada), the Canadian Genetic Disease Network, and the Huntington Society of Canada. Y.P.G. is a Sandoz postdoctoral fellow; B.K. and H.T. are MRC postdoctoral fellows; and F.S. is a postdoctoral fellow of the 2nd Clinica Neurologica, University of Naples, Italy. M.R.H. is an established investigator for the British Columbia Children's Hospital.

References

Andrew SE, Goldberg YP, Kremer B, Telenius H, Theilmann J, Adam S, Starr E, et al (1993) The relationship between trinucleotide (CAG) repeat length and clinical features of Huntington's disease. Nature Genet 4:398–403

Andrew SE, Goldberg YP, Theilmann J, Zeisler Z, Hayden MR (1994) A CCG repeat polymorphism adjacent to the CAG repeat in the Huntington disease gene: implications for diagnostic accuracy and predictive testing. Hum Mol Genet 3:65–68

Andrew SE, Theilmann J, Hedrick A, Mah D, Weber B, Hayden MR (1992) Nonrandom association between Huntington disease and two loci separated by about 3 Mb on 4p16.3. Genomics 13:301–311

Duyao, M, Ambrose C, Myers R, Novelletto A, Persichetti F, Frontali M, Folstein S, et al (1993) Trinucleotide repeat length instability and age of onset in Huntington disease. Nature Genet 4:387–392

Goldberg YP, Andrew SE, Clarke LA, Hayden MR (1993) A PCR method for accurate assessment of trinucleotide repeat expansion in Huntington disease. Hum Mol Genet 6:635–636

Harper PS (1991) Huntington's disease. WB Saunders, London

Hayden MR (1981) Huntington's chorea. Springer, New York

Hayden MR, Martin WRW, Stoessl AJ, Clark C (1986) Positron emission tomography in the early diagnosis of Huntington disease. Neurology 36:888–894

Huntington's Disease Collaborative Research Group (1993) A novel gene containing a trinucleotide repeat that is expanded and unstable on Huntington's disease chromosomes. Cell 72:971–983

Iizuka R, Hirayama K (1986) Dentato-rubro-pallido-luysian atrophy. Handbook Clin Neurol 5:437–443

Iizuka R, Hirayama K, Maehara K (1984) Dentato-rubro-pallido-luysian atrophy: a clinico-pathological study. J Neurol Neurosurg Psychiatr 47:1288–1298

Koide R, Ikeuchi T, Onodera O, Tanaka H, Igarashi S, Endo K, Takahashi H (1994) Unstable expansion of CAG repeat in hereditary dentatorubraln pallidoluysian atrophy (DRPLA). Nature Genetics 6:9–13

Kremer B, Goldberg P, Andrew SE, Squitieri F, Theilmann J, Telenius H, Zeisler J, et al. Worldwide distribution of the Huntington disease (HD) mutation: the sensitivity and specificity of the CAG repeat length assessment (submitted)

Kunkel LM, Smith KD, Boyer SH, Borgaonkar DS, Wachtel SS, Miller OJ, Breg WR, et al (1977) Analysis of human Y chromosome specific reiterated DNA in chromosome variants. Proc Natl Acad Sci USA 74:1245–1249

Nagafuchi S, Yanagisawa H, Sato K, Shirayama T, Ohsaki E, Bundo M, Takeda T, et al (1994) Expansion of an unstable CAG trinucleotide on chromosome 12p in dentatorubral and pallidoluysian atrophy. Nature Genet 6:14–18

Naito H, Oyanagi S (1982) Familial myoclonus epilepsy and choreoathetosis: hereditary dentatorubral-pallidoluysian atrophy. Neurology 32:798–807

Norremolle A, Riess O, Epplen JT, Fenger K, Hasholt L, Sorenson SA (1993) Trinucleotide repeat elongation in the Huntington gene in Huntington disease patients from 71 Danish families. Hum Mol Genet 2:1475–1476

Pritchard C, Zhu N, Zuo J, Bull L, Pericak-Vance MA, Vance JM, Roses AD, et al (1992) Recombination of 4p16 DNA markers in an unusual family with Huntington disease. Am J Hum Genet 50:1218–1230

Riess O, Norremolle A, Sorenson SA, Epplen JT (1993) Improved conditions for the stretch of (CAG)n repeats causing Huntington's disease. Hum Mol Genet 2:637

Robbins C, Theilmann J, Youngman S, Haines J, Altherr MJ, Harper PS, Payne C, et al (1989) Evidence from family studies that the gene causing Huntington disease is telomeric to D4S95 and D4S90. Am J Hum Genet 44:422–425

Rubensztein DC, Barton DE, Davison BCC, Ferguson-Smith A (1993) Analysis of the Huntington gene reveals a trinucleotide-length polymorphism in the region of the gene that contains two CCG-rich stretches and a correlation between decreased age of onset of Huntington's disease and CAG repeat number. Hum Mol Genet 2:1713–1715

Snell RG, MacMillan JC, Cheadle JP, Fenton I, Lazarou LP, Davies P, MacDonald ME, et al (1993) Relationship between trinucleotide repeat expansion and phenotypic variation in Huntington's disease. Nature Genet 4:393–397

Stine OC, Pleasant N, Franz ML, Abbott MH, Folstein SE, Ross CA (1993) Correlation between the onset age of Huntington's disease and length of the trinucleotide repeat in IT-15. Hum Mol Genet 2:1547–1549

Taylor SAM, Barnes GT, MacDonald ME, Gusella JF (1992) A dinucleotide repeat polymorphism at the D4S127 locus. Hum Mol Genet 1:142

Telenius H, Kremer HPH, Goldberg YP, Theilmann J, Andrew S, Zeisler J, Adam S, et al. Somatic and gonadal mosaicism in Huntington disease: instability of the CAG repeat is tissue specific and most prominent in brain and sperm. Nature Genet (in press)

Telenius H, Kremer HPH, Theilmann J, Andrew SE, Almqvist E, Anvret M, Greenberg J, et al (1993) Molecular analysis of juvenile Huntington disease: the major influence on (CAG)n repeat length is the sex of the affected parent. Hum Mol Genet 2:1535–1540

Wasmuth JJ, Hewitt J, Smith B, Allard D, Haines JL, Skarecky D, Hayden MR (1988) A highly polymorphic locus very tightly linked to the Huntington's disease gene. Nature 322:734–736

Weber B, Reiss O, Graham R, Hayden MR (1992*a*) $(CA)_n$ dinucleotide repeat polymorphism at the D4S227 locus. Hum Mol Genet 2:827

Weber B, Riess O, Wolff G, Andrew S, Collins C, Graham R, Theilmann J, et al (1992*b*) Delineation of a 50kb DNA segment containing the site of a recombination event in a sporadic case of Huntington disease. Nature Genet 2:216–222

Zuhlke C, Riess O, Schroder K, Siedlaczck I, Epplen JT, Engel W, Thies U (1993) Expansion of the (CAG)n repeat causing Huntington disease in 352 patients of German origin. Hum Mol Genet 2:1467–1469