THE ROYAL SOCIETY

Received 17 September 2001
Accepted 23 October 2001
Published online 25 February 2002

A view of early vertebrate evolution inferred from the phylogeny of polystome parasites (Monogenea: Polystomatidae)

Olivier Verneau[1*], Sophie Bentz[1], Neeta Devi Sinnappah[1]†, Louis du Preez[2], Ian Whittington[3] and Claude Combes[1]

[1]*Laboratoire de Biologie Animale, UMR 5555 du CNRS, Centre de Biologie et d'Ecologie Tropicale et Méditerranéenne, Université de Perpignan, 66860 Perpignan Cedex, France*
[2]*School of Environmental Sciences and Development, Potchefstroom University, Private Bag X6001, Potchefstroom 2520, South Africa*
[3]*Department of Microbiology and Parasitology, School of Molecular and Microbial Sciences, The University of Queensland, Brisbane, Queensland 4072, Australia*

The Polystomatidae is the only family within the Monogenea to parasitize sarcopterygians such as the Australian lungfish *Neoceratodus poisteri* and freshwater tetrapods (lissamphibians and chelonians). We present a phylogeny based on partial 18S rDNA sequences of 26 species of Polystomatidae and three taxon from the infrasubclass Oligonchoinea (= Polyopisthocotylea) obtained from the gills of teleost fishes. The basal position of the polystome from lungfish within the Polystomatidae suggests that the family arose during the evolutionary transition between actinopterygians and sarcopterygians, *ca.* 425 million years (Myr) ago. The monophyly of the polystomatid lineages from chelonian and lissamphibian hosts, in addition to estimates of the divergence times, indicate that polystomatids from turtles radiated *ca.* 191 Myr ago, following a switch from an aquatic amniote presumed to be extinct to turtles, which diversified in the Upper Triassic. Within polystomatids from lissamphibians, we observe a polytomy of four lineages, namely caudatan, neobatrachian, pelobatid and pipid polystomatid lineages, which occurred *ca.* 246 Myr ago according to molecular divergence-time estimates. This suggests that the first polystomatids of amphibians originated during the evolution and diversification of lissamphibian orders and suborders *ca.* 250 Myr ago. Finally, we report a vicariance event between two major groups of neobatrachian polystomes, which is probably linked to the separation of South America from Africa *ca.* 100 Myr ago.

Keywords: Platyhelminthes; Monogenea; Polystomatidae; Phylogeny; Amniota; Lissamphibia

1. INTRODUCTION

The class Monogenea within the phylum Platyhelminthes includes at least 20 000 species (Rohde 1996) parasitizing mainly chondrichthyan and teleost fishes. Following the most recent classification of the Monogenea by Boeger & Kritsky (2001), monogeneans are divided into two subclasses, Polyonchoinea and Heteronchoinea, with the latter being further subdivided into two infrasubclasses Oligonchoinea and Polystomatoinea. Although the scheme of nomenclature by Boeger & Kritsky (2001) may not be widely accepted, for the purposes of our study on polystomes, we have adopted the terms Heteronchoinea, Oligonchoinea and Polystomatoinea for their convenience to demonstrate discrete monogenean groupings on aquatic tetrapods and fishes. Although members of the Oligonchoinea are only found on fishes, Polystomatoinea includes two families, Sphyranuridae and Polystomatidae, which have been recorded only from aquatic tetrapods, with the exception of a polystome described from the gills and oral cavity of the Australian lungfish (*Neoceratodus poisteri*). Of the two parasite families, Polystomatidae is the most diverse with about 200 described species found in neobatrachian hosts, in which the highest level of diversification has been reached, and archaeobatrachian pipids and pelobatids. In these hosts, adult polystomes always occupy an internal habitat, namely the urinary bladder, but young parasites can also be found on the gills of tadpoles. Polystomatids have also been described from the skin or inside the urinary bladder of a few salamanders, in several families and genera of chelonians, where they inhabit the urinary bladder, the conjunctival sacs or the pharyngeal cavity, and in the hippopotamus, where they live on the surface of the eye or under the eyelid. Thus, the occurrence of this unique monogenean family among lungfishes and tetrapods, together with their high degree of specificity (generally one parasite species is associated with a single host species), their direct life cycle and the worldwide distribution of its representatives, suggests that the origin of the Polystomatidae could be very early, perhaps during the transition of life between aquatic and land vertebrates. If this hypothesis is correct, it is possible that phylogenetic relationships within the Polystomatidae may reflect, at least in part, the evolutionary history of their hosts, because they exemplify a long-standing historical association (Page & Charleston 1998). From molecular phylogenetic analyses, there has been a proposal to include

* Author for correspondence (verneau@univ-perp.fr).
† Present address: School of Environmental and Natural Resource Sciences, The Faculty of Science and Technology, Universiti Kebangsaan Malaysia, 43600 UKM Bangi, Bangi, Selangor, Malaysia.

© 2002 The Royal Society

members of the Sphyranuridae in a subfamily Sphyranurinae within the Polystomatidae (see Sinnappah *et al.* 2001). Here, we consider the Polystomatidae *sensu* Sinnappah *et al.* (2001), as equivalent to the Polystomatoinea *sensu* Boeger & Kritsky (2001). In this paper, using partial 18S rDNA sequences, we investigate the phylogenetic relationships of 25 polystomatid species and one sphyranurine, from the Australian lungfish, seven species of chelonians, one salamander species, four archaeobatrachian species and 13 neobatrachian species. Three non-polystomatids from the infrasubclass Oligonchoinea, parasitizing teleost fishes, were also examined. We discuss the phylogenetic relationships within and between major groups of polystomatids and their implications for tracking the evolutionary history of the main amphibious vertebrate lineages, namely lissamphibians and freshwater turtles.

2. MATERIAL AND METHODS

(a) *Parasite sampling and molecular work*

All parasite samples used in this study were from our collections. Host and parasite species were carefully examined to verify identity. Each parasite species, its habitat in the host and each host species, together with its systematic affiliations, are listed in table 1. No voucher specimens from our collections were deposited, but mounted individual specimens of most of the species analysed can be borrowed for morphological studies by request to the first author. *Sphyranura oligorchis*, isolated from *Necturus maculosus*, is considered to be a polystomatid because we have shown previously that the Sphyranuridae is nested within the Polystomatidae, suggesting a revision of its systematic status as a subfamily, the Sphyranurinae (Sinnappah *et al.* 2001).

DNA extractions, partial 18S rDNA amplifications, cloning and sequencing approaches were carried out following procedures described in Sinnappah *et al.* (2001). We designed another oligonucleotide called IFA (5′-CGTCGTGACAG CGATCGGGG-3’), which is homologous to the partial 18S sequence of *Polystoma gallieni* (accession no. AJ287989) at positions 333–352, to replace IF1 for internal sequencing (Sinnappah *et al.* 2001).

(b) *Phylogenetic analyses*

Among the 29 partial 18S rDNA sequences of monogeneans used in this study, 11 were reported in Sinnappah *et al.* (2001) (accession nos AJ287989–AJ287999), and the 18 remaining sequences were deposited at the EMBL database under accession nos AJ297769–AJ297785 and AJ313462. Three outgroups belonging to the Cestoda were extracted from EMBL (accession nos Y09675–Y09677) for rooting trees. Sequences were aligned by eye with the ED program of the MUST package (Philippe 1993) with the aid of a previously reported alignment of 14 sequences (Sinnappah *et al.* 2001). When necessary, blocks of gaps were introduced to optimize the alignment but, finally, indels as well as undetermined sites, non-sequenced and ambiguously aligned regions were removed for all analyses. The full sequence alignment is available at EMBL under accession no. ALIGN_000194. After removing any characters contained in the following intervals: 1–13, 47–241, 302–305, 366–370, 582–583, 612–636 and 688–731, and at positions 253, 275, 342, 413 and 646, it gave, respectively, 438 aligned sites among which 150 were variable and 117 parsimony informative.

Three methods were applied for phylogenetic reconstructions. A minimum evolution (ME) tree was performed with the program METREE (Rzhetsky & Nei 1993) on Kimura-two-parameter distances (Kimura 1980) because the transition–transversion ratio was higher than 1 and nucleotide frequencies were almost all equal to 0.25. Bootstrapping (1000 replicates) was used to assess the robustness of relationships. For the maximum-likelihood analyses, we used PUZZLE, v. 4.0 (Strimmer & Von Haeseler 1996) with the substitution model of Hasegawa *et al.* (1985) with nine (one invariable plus eight γ) rate categories. Rate heterogeneity (0.30) was directly estimated from the dataset with the PUZZLE program. The consistency of nodes was evaluated with 10 000 quartet puzzling (QP) steps. Parsimony analyses were conducted with PAUP*, v. 4.0b8 (Swofford 1998) using a heuristic search, and giving equal weight to transitions and transversions. Heuristic search settings were optimized via stepwise addition (10 replicates) and the robustness of nodes was assessed with 1000 bootstrap replicates.

(c) *Relative-rate tests*

The constancy of the molecular clock within the Polystomatidae was examined by using the two-cluster relative-rate test of Takezaki *et al.* (1995) implemented in the software package PHYLTEST, v. 2.0 (Kumar 1996). Ten clusters were specified from the ME tree, each cluster including at least one parasite species. The Kimura two-parameter distance (Kimura 1980) was selected and statistical differences between branch lengths were estimated for the main divergent clusters, while different outgroups chosen from the ME tree were given, allowing the detection of slow or fast evolving lineages.

(d) *Molecular divergence-time estimates and molecular calibration*

Divergence-time estimates were derived from branch length calculations in the ME tree. To estimate the timing of a particular split between two designated lineages (e.g. the dichotomic event that separates species of lineages A and B from species of lineage C, see figure 1), we calculated the averaged distance from all the branches descended from the anchor point (T), to the exception of those leading to species that have shown faster or slower evolutionary rates (in that case, species of lineage C). This averaged distance corresponds to L_A. This led to estimate t_1 corresponding to the molecular-divergence time estimate of the investigated speciation event: $t_1 = T(L_A - L_B)/L_A$. This molecular calibration (t_1) was further used for calculations of other divergence-time estimates, such as t_2, t_3 (see figure 1) and so on (Bailey *et al.* 1991).

Though both actinopterygians and sarcopterygians are known from the Early Devonian (408 Myr ago), isolated scales attributed to actinopterygians have been reported earlier from the Upper Silurian (Carroll 1988). According to Janvier (1998) and Ahlberg (1999), the Actinopterygii–Sarcopterygii split was dated at *ca.* 425 Myr ago. We used this dating to anchor the molecular clock within heteronchoinean monogeneans in the ME tree. Indeed, if we assume that the Polystomatidae is monophyletic, though the phylogenetic position of *Concinnocotyla australensis* that parasitized the lungfish is unclear (see § 3), the separation of the Polystomatidae from the Oligonchoinea is well correlated with the separation of their host lineages, i.e. the divergence of actinopterygians from sarcopterygians.

Table 1. List of parasite species studied.
(Twenty-six polystomatids, three non-polystomatid monogeneans and three tapeworms were used for outgroup comparisons, including their habitat on or in the host, host origin, host systematics and host locality. Parasite species are classified in four groups according to their host (amphibian, chelonian, lungfish and teleostean) and are listed in alphabetical order. Outgroup representatives constitute the fifth group.)

parasite species	habitat	host species	host systematics	locality
Eupolystoma alluaudi	urinary bladder	*Bufo* sp.	Neobatrachia–Bufonidae	Togo
Eupolystoma sp.	urinary bladder	*Bufo garmani*	Neobatrachia–Bufonidae	South Africa
Metapolystoma brygoonis	urinary bladder	*Ptychadena mascareniensis*[a]	Neobatrachia–Ranidae	Madagascar
Polystoma australis	urinary bladder	*Kassina senegalensis*	Neobatrachia–Hyperoliidae	South Africa
Polystoma cuvieri	urinary bladder	*Physalaemus cuvieri*	Neobatrachia–Leptodactylidae	Paraguay
Polystoma gallieni	urinary bladder	*Hyla meridionalis*	Neobatrachia–Hylidae	France
Polystoma integerrimum	urinary bladder	*Rana temporaria*	Neobatrachia–Ranidae	France
Polystoma lopezromani	urinary bladder	*Phrynohyas venulosa*	Neobatrachia–Hylidae	Paraguay
Polystoma nearcticum	urinary bladder	*Hyla versicolor*	Neobatrachia–Hylidae	USA
Polystoma baeri	gills of tadpole	*Hemisus marmoratus*	Neobatrachia–Ranidae	Ivory Coast
Polystoma testimagna	urinary bladder	*Strongylopus f. fasciatus*	Neobatrachia–Ranidae	South Africa
Polystoma umthakathi	urinary bladder	*Natalobatrachus bonebergi*	Neobatrachia–Ranidae	South Africa
Sundapolystoma chalconotae	urinary bladder	*Rana chalconota*	Neobatrachia–Ranidae	Malaysia
Neodiplorchis scaphiopi	urinary bladder	*Scaphiopus bombifrons*	Archaeobatrachia–Pelobatidae	USA
Protopolystoma sp.	urinary bladder	*Xenopus mulleri*	Archaeobatrachia–Pipidae	Togo
Protopolystoma xenopodis	urinary bladder	*Xenopus laevis*	Archaeobatrachia–Pipidae	South Africa
Pseudodiplorchis americanus	urinary bladder	*Scaphiopus couchii*	Archaeobatrachia–Pelobatidae	USA
S. oligorchis	skin	*Necturus maculosus*	Caudata–Proteidae	USA
Neopolystoma chelodinae	urinary bladder	*Chelodina longicollis*	Pleurodira–Chelidae	Australia
Neopolystoma liewi	conjunctival sac	*Cuora amboinensis*	Cryptodira–Bataguridae	Malaysia
Neopolystoma spratti	conjunctival sac	*Chelodina longicollis*	Pleurodira–Chelidae	Australia
Polystomoides asiaticus	oral cavity	*Cuora amboinensis*	Cryptodira–Bataguridae	Malaysia
Polystomoides bourgati	urinary bladder	*Pelusios castaneus derbianus*	Pleurodira–Pelomedusidae	Togo
Polystomoides malayi	urinary bladder	*Cuora amboinensis*	Cryptodira–Bataguridae	Malaysia
Polystomoides siebenrockiellae	urinary bladder	*Siebenrockiella crassicollis*	Cryptodira–Bataguridae	Malaysia
Concinnocotyla australensis	gills	*Neoceratodus forsteri*	Dipnoi–Ceratodontidae	Australia
Choricotyle chrysophrii	gills	*Pagellus erythrinus*	Percoidei–Sparidae	France
Diclidophora luscae capelani	gills	*Trisopterus luscius capelanus*	Gadoidei–Gadidae	France
Microcotyle erythrinii	gills	*Pagellus erythrinus*	Percoidei–Sparidae	France
Bothriocephalus barbatus	gut	*Scophthalmus rhombus*	Pleuronectoidei–Scophthalmidae	France
Bothriocephalus claviceps	gut	*Anguilla anguilla*	Anguilloidei–Anguillidae	France
Triaenophorus nodulosus	gut	*Esox lucius*	Protacanthopterygii–Esocidae	Switzerland

[a] This is a non-endemic ranid found on Madagascar and is considered to be a waif from Africa (Duellman & Trueb 1986).

3. RESULTS

(a) *Phylogenetic analyses*

Bootstrap proportions (BPs) inferred from ME and maximum parsimony analyses, as well as QP values, are placed directly on the ME tree, which is shown in figure 2. BPs resulting from ME analysis reveal that monophyly of the Polystomatidae is weakly supported (BP = 61%). Indeed, the lungfish parasite *C. australensis* appears either basal to Heteronchoinea (Oligonchoinea plus other species of Polystomatidae) or at the base of the Polystomatidae. Within the Polystomatidae, turtle and amphibian polystomatid lineages are each monophyletic and are sister groups. *Sphyranura oligorchis*, the parasite of the salamander *N. maculosus*, is nested within anuran polystomes, but its relationship with other polystomes is still unresolved. Among the anuran polystomes, phylogenetic relationships indicate that neobatrachian polystomes (*Polystoma*, *Metapolystoma*, *Eupolystoma* and *Sundapolystoma* spp.) constitute a clade, whereas monophyly of archaeobatrachian polystomatids (*Protopolystoma*, *Pseudodiplorchis* and *Neodiplorchis*) is not supported. However, polystomes of pipids (*Protopolystoma* spp.) and pelobatids (*Pseudodiplorchis* and *Neodiplorchis*) are each monophyletic. Finally, within neobatrachian polystomes, two monophyletic groups can be recognized. The first includes *Sundapolystoma* and *Eupolystoma*, and the second clusters *Metapolystoma* and *Polystoma*. Furthermore, African and European *Polystoma* spp. plus *Metapolystoma* spp. constitute a well-supported group compared with American *Polystoma* spp. (i.e. *Polystoma lopezromani*, *Polystoma cuvieri* and *Polystoma nearcticum*).

A QP tree (not shown) reveals almost the same topological arrangements to those of the ME tree, but with QP values slightly lower than the BP values (figure 2). Nevertheless, two differences are noted: first, monophyly of the Polystomatidae is weakly supported owing to the

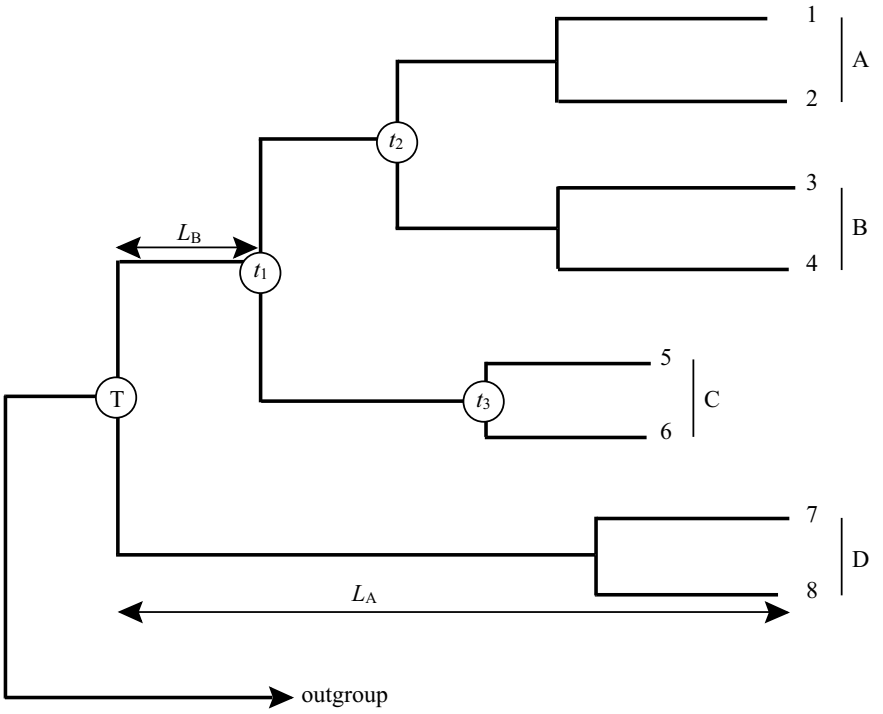

Figure 1. Molecular divergence-time calculations from a distance tree. Numbers 1–8 represent species and letters A–D represent different lineages or clades. T corresponds to the node at which the molecular clock is anchored and t_1–t_3 are the molecular-divergence time estimates that are derived from the molecular calibration. L_A and L_B represent molecular distances.

basal position of *Concinnocotyla* within Heteronchoinea (78%) and, second, *Sphyranura* clusters with pelobatid polystomatids, but with a very low QP value (58%).

The parsimony analysis resulted in six equally parsimonious trees, with lengths of 315 steps and a consistency index (CI) of 0.56. The consensus tree (not shown) differs from ME and ML analyses essentially by the phylogenetic position of *Concinnocotyla* that appears basal to amphibian polystomatids (BP = 56%). It also differs in the relationships within neobatrachian polystomatids in which *Eupolystoma* and *Sundapolystoma* are not closely related and in which American *Polystoma* spp. do not form a monophyletic group. Finally, BP favour the monophyly of Polystomatidae (BP = 69%) and indicate a weak relationship between *Sphyranura* and neobatrachian plus pelobatid polystomes (BP = 57%).

On the basis of results inferred from ME, MP and ML analyses, we will consider that relationships within Heteronchoinea is a basal polytomy from which three main branches have arisen, one leading to Oligonchoinea, the second to *Concinnocotyla* and the third to amphibian and chelonian polystomatids (figure 3). Within amphibian polystomatids, all analyses reveal that three main associations are monophyletic, the neobatrachian, pelobatid and pipid polystomatid lineages (figure 2). Because the phylogenetic position of *Sphyranura* is still unclear and cannot be resolved either from parsimony or from ME and ML analyses, the best solution is to consider a polytomy within basal amphibian polystomatids from which four main branches have arisen, one leading to neobatrachain polystomatids, a second to pelobatid polystomatids, a third to *Protopolystoma* and the last to *Sphyranura* (figure 3). Finally, within neobatrachian polystomatids, ME, MP and ML analyses reveal that *Polystoma* plus *Metapolystoma* may constitute a clade, as well as non-American *Polystoma* plus *Metapolystoma* (figure 2). However, the two monophyletic associations, *Eupolystoma* plus *Sundapolystoma* and American *Polystoma*, respectively, can be questioned in MP.

(b) *Relative-rate tests*

Among the 82 two-cluster relative-rate tests conducted between major lineages, 23 were significant at the 5% level, indicating differences in rates of molecular evolution (table 2). These differences mainly concern *S. oligorchis* (cluster Sphy) and *C. australensis* (cluster Con) that respectively show faster and slower substitution rates than most polystomatid lineages. This result could explain the major discrepancies observed between the three phylogenetic reconstructions. Differences in branch length can also be detected between cluster Che (*Neopolystoma* + *Polystomoides*) and both cluster NeoY (*Eupolystoma* and *Sundapolystoma*) and cluster ArcY (*Protopolystoma*), and between cluster Neo (*Polystoma* + *Metapolystoma* + *Eupolystoma* + *Sundapolystoma*) and cluster ArcX (*Pseudodiplorchis americanus* + *Neodiplorchis scaphiopi*). These results suggest that the lineage that associates chelonian polystomatids (cluster Che) and the lineage that clusters the pelobatid polystomatids (cluster ArcX) exhibit slower substitution rates than any other lineages.

(c) *Molecular divergence-time estimates*

Assuming that the Polystomatidae is monophyletic and that the polytomy at the base of Heteronchoinea (figure 3) reflects rapid subsequent speciations following the actinopterygian–sarcopterygian divergence, then the molecular clock is anchored at 425 Myr ago in the ME (figure 2) and is used for molecular calibrations. The relative-rate tests reveal slower substitution rates for *Concinnocotyla* and within chelonian and pelobatid polytomatids, and faster rates for *Sphyranura*. Thus calculation of the separation

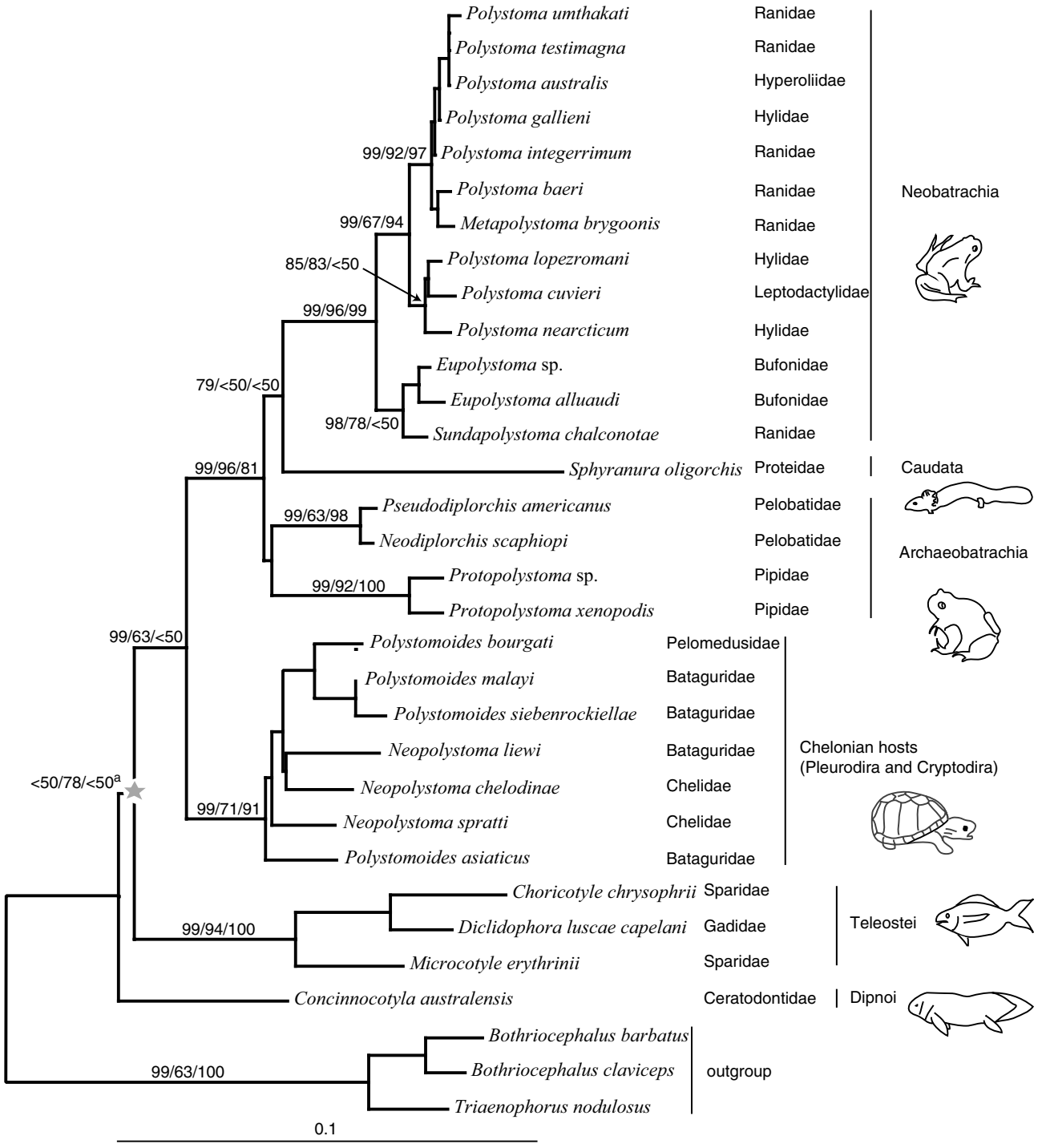

Figure 2. Minimum evolution (ME) tree among 26 polystomatids, three oligonchoinean monogeneans and three outgroups (cestodes) inferred from METREE (Rzhetsky & Nei 1993) on Kimura two-parameter distances (Kimura 1980). The star indicates the node at which the molecular clock is anchored for molecular-time estimates. Numbers along branches represent bootstrap and quartet puzzling values resulting from ME, maximum likelihood and MP analyses. Superscript a shows alternative hypothesis, i.e. Polystomatidae is monophyletic (61/ less than 50/69).

between chelonian and amphibian polystomatids was estimated by averaging distances from the anchor point to all species of Oligonchoinea, *Protopolystoma* and neobatrachian polystomatids that exhibit similar evolutionary rates (18 distances). Our calculations suggest that this speciation event would have occurred 353 ± 26 Myr ago. This point is then further used to estimate the timing of chelonian polystomatid diversification, as well as the evolution of the major lineages of amphibian polystomatids. Such date calculations for chelonian polystomatid diversification, based on the averaged distances of the seven species that are derived from the new anchor point, gives an age of *ca.* 191 ± 40 Myr ago (figure 3). Similarly, calculation of the emergence of amphibian polystomatid lineages, based on the averaged distances of 15 species (*Protopolystoma* plus neobatrachian polystomes), gives an age of *ca.* 246 ± 11 Myr ago. Finally, using this last date calculation as the new anchor point, separation between

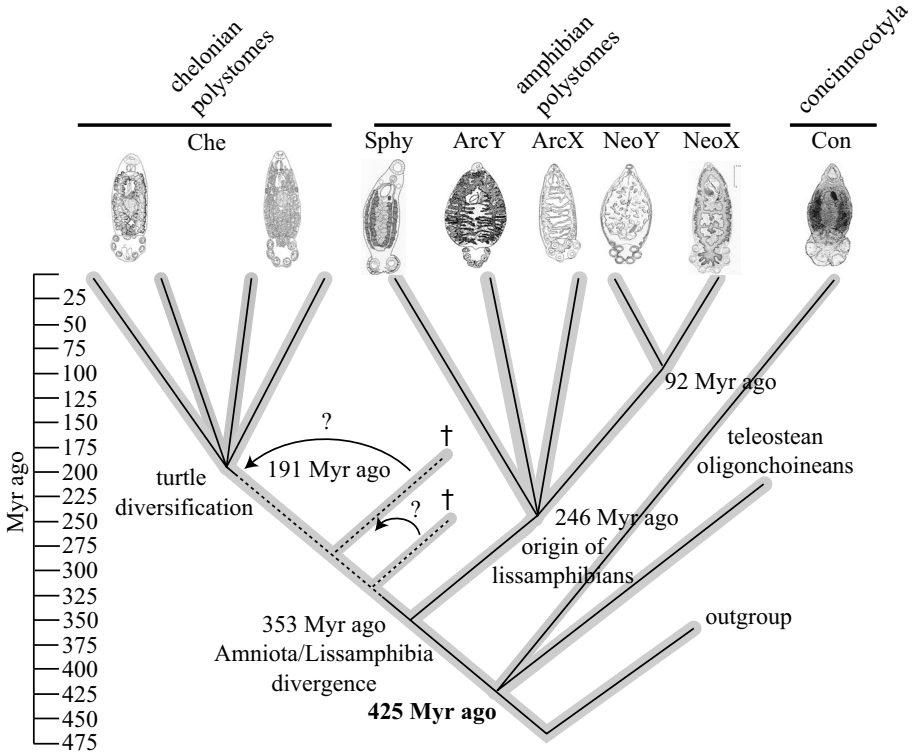

Figure 3. Evolutionary scheme of the Polystomatidae–Sarcopterygii association resulting from parasite relationships, molecular-time estimates and palaeontological evidence of their hosts. Grey lines correspond to the host relationships and black narrow lines refer to the evolutionary path of polystomatids within sarcopterygians. The arrows indicate host-switching events from presumed primitive extinct amniotes to freshwater turtles. The abbreviations used (ArcX, ArcY, Che, Con, NeoX, NeoY and Sphy) are listed in table 2. The number in bold face corresponds to the presumed dating of the origin of the Polystomatidae.

the two lineages that associate, respectively, *Eupolystoma* (two species) and *Sundapolystoma* (one species) on the one hand, and *Polystoma* (nine species) and *Metapolystoma* (one species) on the other, is estimated to have occurred 92 ± 12 Myr ago (figure 3).

4. DISCUSSION

(a) *An ancient origin for the Polystomatidae*

The Polystomatidae is essentially characterized by a well-developed haptor, bearing three pairs of suckers (polystomatids proper) or one sucker pair (sphyranurines). They are also distinguished from Oligonchoinea by their host type because all of them, except one species, are known from freshwater tetrapods. Indeed, *C. australensis*, the single polystomatid species that infests fishes, is recorded from the Australian lungfish, which is currently recognized as the most basal taxon among sarcopterygians (Meyer 1995; Zardoya & Meyer 1996, 1997; Zardoya *et al.* 1998). Our results suggest that *Concinnocotyla* was the first polystomatid to diverge within the Polystomatidae. Although the phylogenetic position of this taxon at the base of Polystomatidae is weakly supported, it agrees with the morphological analysis of Boeger & Kritsky (1997), who placed it as the sister taxon to all other Polystomatoinea (polystomatids plus sphyranurines). One reason that this may obscure the position of *Concinnocotyla* within the Heteronchoinea is the slow evolution rate of its 18S gene (table 2).

Figure 2 indicates that turtle and amphibian polystomatid lineages are monophyletic and are separated by very long branches. They also cluster to each other with high bootstrap values in ME analysis, but with low values in MP and ML analyses. These results, reported in figure 3, summarize the most probable interrelationships within Heteronchoinea. Consequently, these data provide good evidence for a very ancient origin of the Polystomatidae, which may track the evolutionary history of the first aquatic tetrapods following the Actinopterygii–Sarcopterygii transition in the Palaeozoic age, *ca.* 425 Myr ago (Janvier 1998; Ahlberg 1999).

(b) *Evolution of polystomatids within amniotes and freshwater chelonians*

Phylogenetic relationships within polystomatids suggest a sister relationship between amphibian and chelonian parasites (figure 2), and molecular divergence-time estimates indicate that the two parasite lineages separated *ca.* 353 Myr ago. In the light of palaeontological data and morphological analyses, evidence has been found for a close relationship between Palaeozoic amphibian lepospondyls and lissamphibians (Laurin & Reisz 1997; Laurin *et al.* 2000). Concerning the origin of the Amniota, an anmniote-like skeleton was reported from the Early Carboniferous of Scotland (Paton *et al.* 1999). All these features, added to the occurrence of *Ichthyostega*, a tetrapod of the Upper Devonian that is perceived as one of the most primitive stem tetrapods (Ahlberg & Milner 1994), indicate that the separation between Lissamphibia and Amniota lineages probably occurred in the Lower Carboniferous, *ca.* 350–355 Myr ago. Since this palaeontological dating is very close to the molecular divergence-time

Table 2. Results of relative-rate tests for pairs of clusters show statistical differences in rate constancy at the 5% level, when the Kimura two-parameter distance (Kimura 1980) is used. (Note: specification of cluster names and total number of species in parentheses are as follows: cluster NeoX (10) = *Polystoma* + *Metapolystoma*; cluster NeoY (3) = *Eupolystoma* + *Sundapolystoma*; cluster Neo (13) = *Polystoma* + *Metapolystoma* + *Eupolystoma* + *Sundapolystoma*; cluster Sphy (1) = *S. oligorchis*; cluster ArcX (2) = *Ps. americanus* + *N. scaphiopi*; cluster ArcY (2) = *Protopolystoma*; cluster Che (7) = *Polystomoides* + *Neopolystoma*; cluster Con (1) = *C. australensis*; cluster Oli (3) = Oligonchoinea; cluster Ces (3) = Cestoda.)

cluster I	cluster II	cluster II (outgroup)	*Z*-statistic
NeoX	Sphy	Oli	2.323 87
NeoY	Sphy	Che	2.470 76
NeoY	Sphy	Oli	1.990 81
Neo	Sphy	Che	2.111 77
Neo	Sphy	Oli	2.265 80
ArcX	Sphy	Che	3.500 37
ArcX	Sphy	Con	2.319 26
ArcX	Sphy	Oli	2.582 24
ArcX	Sphy	Ces	2.039 48
ArcY	Sphy	Che	2.891 79
Che	Sphy	Oli	2.786 05
Che	Sphy	Ces	2.708 28
NeoY	Che	Ces	2.219 94
ArcY	Che	Oli	2.179 72
ArcY	Che	Ces	2.385 44
NeoX	ArcX	Che	2.223 36
Neo	ArcX	Che	2.145 94
NeoX	Con	Ces	2.055 35
NeoY	Con	Ces	2.820 65
Neo	Con	Ces	2.269 28
ArcX	Con	Ces	2.020 89
ArcY	Con	Ces	2.683 60
Sphy	Con	Ces	3.388 13

estimate reported for the divergence time between amphibian and chelonian polystomatids (figure 3) and that occurrence of the first turtle in the fossil record corresponds to *Proganochelys*, a Triassic freshwater amphibious form (Gaffney 1990), it can be postulated that during the split between lissamphibians and amniotes, polystomatids may have lived on primitive amniotes and may subsequently have 'switched' to freshwater turtles. As the direct life cycle of these parasites involves an obligatory aquatic host, this hypothesis implies that some primitive amniotes must have been adapted to an aquatic lifestyle very early in the Palaeozoic age, probably at the time of their first appearance. This scenario is probable because the fossil record indicates that amniotes reinvaded the aquatic medium repeatedly (Reisz 1997; Motani *et al.* 1998; Rieppel 1999). Furthermore, according to Laurin *et al.* (2000), the lack of sufficient knowledge raises numerous questions about the ecological status of several Devonian and Carboniferous taxa. For instance, were these taxa primitively or secondarily aquatic? How terrestrial or aquatic were these taxa?

Our second molecular divergence-time estimate (figure 3) suggests that turtle polystomatids radiated *ca.* 191 Myr ago, following a switch from a presumed extinct aquatic amniote that was infected by ancestral polystomes. Whereas this capture may have happened when turtles originated, *ca.* 230–200 Myr ago (Gaffney & Meeker 1983; Gaffney & Kitching 1994; Hedges & Poling 1999), it also could have occurred soon after, by the end of the Triassic, when turtles attained a significant ecological diversity including amphibious forms (Rougier *et al.* 1995). Indeed, palaeontological records indicate that *Kayentachelys* is the earliest unambiguous turtle to exhibit a shell associated with an aquatic habitat, which extends the history of cryptodires, one of two groups of modern turtles with the pleurodires, to at least the Early Jurassic (Gaffney *et al.* 1987). Furthermore, phylogenetic analysis including *Kayentachelys*, *Proterochersis* a Triassic turtle, and other Triassic and Jurassic turtles, led Rougier *et al.* (1998) to suggest that the two groups of extant turtles, cryptodires and pleurodires, would have differentiated in the Upper Triassic. Then, the diversification of turtles in the Upper Triassic (*ca.* 208 Myr ago) fits well with our molecular calibration and may explain the radiation of turtle polystomatids at *ca.* 190 Myr ago.

(c) *Evolution of main amphibian polystomatid lineages*

Whatever the procedure of phylogenetic reconstruction used in this study, there is good evidence that neobatrachian polystomes constitute a clade that is characterized by a very long branch (figure 2). Two other groups are also well defined: the pipid (*Protopolystoma* species), and pelobatid (*Pseudodiplorchis* and *Neodiplorchis*) polystome lineages. However, at present, we cannot conclude the precise interrelationships between *Sphyranura* and the above lineages within the Polystomatidae, which suggests that a polytomy is a good approximation of their relationships (figure 3). Due to the fact that no saturation of substitutions was observed in our dataset (data not shown), and because several basal and terminal nodes are well resolved using all approaches, it is very unlikely that the lack of resolution at this particular point of the tree is the result of an insufficient number of informative characters along the slowly evolving gene studied. Furthermore, the molecular divergence-time estimate for this particular node indicates that the four major amphibian polystomatid lineages could have diverged *ca.* 246 Myr ago, which would correspond to the presumed origin of the three extant lissamphibian orders, namely Caudata, Gymnophiona and Anura.

The first occurrence of lissamphibians in the fossil record is evidenced by *Triadobatrachus massinoti* (see Piveteau 1936*a*,*b*; Rage & Rocek 1989), an Early Triassic amphibian that has some anuran-like features, but the earliest known anurans (Shubin & Jenkins 1995), caecilians (Jenkins & Walsh 1993) and salamanders (Evans *et al.* 1988) are represented by fossils from the Early and Middle Jurassic. Phylogenies inferred from morphological evidence from fossil and living taxa of lissamphibians have shown a relationship between frogs and salamanders (the Batrachia hypothesis), suggesting that caecilians were the first order to emerge (Rage & Janvier 1982; Trueb & Cloutier 1991; Milner 1993; Cannatella & Hillis 1993; McGowan & Evans 1995). Although a frog–salamander relationship has also been proposed from mitochondrial gene studies (Hay *et al.* 1995), another branching pattern that links salamanders to caecilians has been suggested from molecular studies of nuclear genes or combined

nuclear and mitochondrial genes (Hedges *et al.* 1990; Hay *et al.* 1995; Feller & Hedges 1998). Following the historical biogeography of amphibians, as well as their phylogenetic relationships, it has been suggested that a single geological event, i.e. the breakup of Pangaea initiated in the Early Jurassic, *ca.* 180 Myr ago (Brown & Lomolino 1998), could be at the origin of salamanders (Laurasia), caecilians (Gondwana) and both anuran suborders, Neobatrachia (Gondwana) and Archaeobatrachia (Laurasia) (Feller & Hedges 1998). However, recent phylogenetic analysis based on the complete mitochondrial DNA of three representatives of each lissamphibian order has rejected a relationship between salamanders and caecilians, validating the Batrachia hypothesis (Zardoya & Meyer 2001). Thus, conflicts that have arisen between the different approaches suggest that the three major lissamphibian orders may have diverged over a very short period of time, as was previously proposed by Hay *et al.* (1995), probably in the Early Triassic, *ca.* 250 Myr ago.

Regarding the molecular dating reported for the diversification of the four major amphibian polystomatid lineages and the relationships between lissamphibian orders, it is likely that the amphibian parasite lineages arose during the diversification of their hosts *ca.* 250 Myr ago, reinforcing a scenario of coevolution. However, the non-monophyly of archaeobatrachian polystomatids combined with our molecular dating, suggest that the two lineages infesting pipid and pelobatid frogs, respectively (figure 3), arose in the Early Triassic. This result contradicts the biogeographical scenario, which considers that Archaeobatrachia and Neobatrachia diverged during the break-up of Pangaea (Feller & Hedges 1998). Following the line of parallel evolution between hosts and their parasites, and the apparent polytomy between the neobatrachian and the two archaeobatrachian polystomatid lineages, it is likely that a split between Neobatrachia and Archaeobatrachia at *ca.* 180 Myr ago is underestimated. It also raises questions about the monophyly of Archaeobatrachia.

(d) *Origin of neobatrachian polystomes*

Neobatrachian polystomatids (figure 2) are separated from archaeobatrachian and caudatan polystomatids by a very long branch, which divides into two monophyletic groups. According to Bentz *et al.* (2001), *Metapolystoma* species can be regarded as members of *Polystoma*. Thus, the first group, which is well supported by BP and QP values, includes *Polystoma* species distributed worldwide that parasitize Madagascan, African plus European Ranidae, African Hyperoliidae, American plus European Hylidae and South American Leptodactylidae. The second group, though weakly supported in parsimony analyses (figure 2), associates *Eupolystoma* and *Sundapolystoma* species that parasitize, respectively, two African *Bufo* and one Asian *Rana*. The molecular calibration reported in figure 3 indicates that these two groups would have diverged *ca.* 92 Myr ago. Although distribution of neobatrachian polystomes is cosmopolitan, the divergence between *Polystoma* and the cluster *Eupolystoma* plus *Sundapolystoma*, could be correlated with the separation of South America from Africa, which ended *ca.* 100 Myr ago (Brown & Lomolino 1998). In that case, ancestors of *Polystoma* and *Eupolystoma* plus *Sundapolystoma*, would have originated in South American bufonoids and African ranoids, respectively—the two presumed vicariant neobatrachian lineages (Feller & Hedges 1998). The cosmopolitan distribution of *Polystoma* species and its wide host spectrum (table 1) can be regarded as recent dispersal events that occurred following host dispersals from America to Eurasia and Africa in the Upper Cenozoic (Duellman & Trueb 1986), the parasite colonizations involving numerous host-switching events (Bentz *et al.* 2001). Furthermore, it has been shown from molecular phylogenetic analyses within neobatrachian polystomes that African *Polystoma* species are 'more derived' than representatives of Eurasia and America, suggesting that *Polystoma* invaded Africa very recently (Bentz *et al.* 2001). But our scenario requires validation by analysing more species of *Eupolystoma*, as well as species of related genera in Africa and Asia.

The authors thank all the researchers who contributed to polystome collections, in particular: Sim-Dozou Kulo, Susan Lim, Jean Mariaux, Klaus Rohde, Bertrand Sellin, Richard Tinsley and Claude Vaucher. They also thank Blair Hedges and an anonymous reviewer for helpful comments on an earlier version of this manuscript. S.B. was supported financially by the Fondation des Treilles (Paris) and N.D.S. by a doctoral scholarship from the French Embassy in Malaysia. This study was supported by a grant from Actions Concertées Coordonnées (ACC SV7: Systématique et Biodiversité). O.V. was awarded a travel grant from the French Ministry of Foreign Affairs to present part of this work at the Fourth International Symposium on Monogenea (ISM4) that was held in Brisbane, Queensland, Australia, in July 2001.

REFERENCES

Ahlberg, P. E. 1999 Something fishy in the family tree. *Nature* **397**, 564–565.

Ahlberg, P. E. & Milner, A. R. 1994 The origin and early diversification of tetrapods. *Nature* **368**, 507–514.

Bailey, W. J., Fitch, D. H. A., Tagle, D. A., Czelusniak, J., Slightom, J. L. & Goodman, M. 1991 Molecular evolution of the ψη-globin gene locus: gibbon phylogeny and the hominoid slowdown. *Mol. Biol. Evol.* **8**, 155–184.

Bentz, S., Leroy, S., Du Preez, L., Mariaux, J., Vaucher, C. & Verneau, O. 2001 Origin and evolution of African *Polystoma* (Monogenea: Polystomatidae) assessed by molecular methods. *Int. J. Parasitol.* **31**, 697–705.

Boeger, W. A. & Kritsky, D. C. 1997 Coevolution of the Monogenoidea (Platyhelminthes) based on a revised hypothesis of parasite phylogeny. *Int. J. Parasitol.* **27**, 1495–1511.

Boeger, W. A. & Kritsky, D. C. 2001 Phylogenetic relationships of the Monogenoidea. In *Interrelationships of the Platyhelminthes* (ed. D. T. J. Littlewood & R. A. Bray), pp. 92–102. New York: Taylor & Francis.

Brown, J. H. & Lomolino, M. V. 1998 *Biogeography*, 2nd edn. Sunderland, MA: Sinauer.

Cannatella, D. C. & Hillis, D. M. 1993 Amphibian relationships: phylogenetic analysis of morphology and molecules. *Herpetol. Monogr.* **7**, 1–7.

Carroll, R. L. 1988 *Vertebrate paleontology and evolution*. New York: Freeman.

Duellman, W. E. & Trueb, L. 1986 *Biology of amphibians*. New York: McGraw-Hill.

Evans, S. E., Milner, A. R. & Mussett, F. 1988 The earliest known salamanders (Amphibia, Caudata): a record from the middle Jurassic of England. *Geobios* **21**, 539–552.

Feller, A. E. & Hedges, S. B. 1998 Molecular evidence for the early history of living amphibians. *Mol. Phylogenet. Evol.* **9**, 509–516.

Gaffney, E. S. 1990 The comparative osteology of the triassic turtle *Proganochelys*. *Bull. Am. Mus. Nat. Hist.* **194**, 1–263.

Gaffney, E. S. & Kitching, J. W. 1994 The most ancient African turtle. *Nature* **369**, 55–58.

Gaffney, E. S. & Meeker, L. J. 1983 Skull morphology of the oldest turtles: a preliminary description of *Proganochelys quenstedti*. *J. Vert. Paleontol.* **3**, 25–28.

Gaffney, E. S., Hutchison, J. H., Jenkins Jr, F. A. & Meeker, L. J. 1987 Modern turtle origins: the oldest known cryptodire. *Science* **237**, 289–291.

Hasegawa, M., Kishino, H. & Yano, K. 1985 Dating of the human–ape splitting by a molecular clock of mitochondrial DNA. *J. Mol. Evol.* **22**, 160–174.

Hay, J. M., Ruvinsky, I., Hedges, S. B. & Maxson, L. R. 1995 Phylogenetic relationships of amphibian families inferred from DNA sequences of mitochondrial 12S and 16S ribosomal RNA genes. *Mol. Biol. Evol.* **12**, 928–937.

Hedges, S. B. & Poling, L. L. 1999 A molecular phylogeny of reptiles. *Science* **283**, 998–1001.

Hedges, S. B., Moberg, K. D. & Maxson, L. R. 1990 Tetrapod phylogeny inferred from 18S and 28S ribosomal RNA sequences and a review of the evidence for amniote relationships. *Mol. Biol. Evol.* **7**, 607–633.

Janvier, P. 1998 Forerunners of four legs. *Nature* **395**, 748–749.

Jenkins Jr, F. A. & Walsh, D. M. 1993 An early Jurassic caecilian with limbs. *Nature* **365**, 246–250.

Kimura, M. 1980 A simple method for estimating evolutionary rate of base substitutions through comparative studies of nucleotide sequences. *J. Mol. Evol.* **16**, 111–120.

Kumar, S. 1996 *Phyltest: a program for testing phylogenetic hypothesis*, v. 2.0. University Park, PA: The Pennsylvania State University.

Laurin, M. & Reisz, R. R. 1997 A new perspective on tetrapod phylogeny. In *Amniote origins: completing the transition to land* (ed. S. S. Sumida & K. L. M. Martin), pp. 9–59. London: Academic.

Laurin, M., Girondot, M. & de Ricqlès, A. 2000 Early tetrapod evolution. *Trends Ecol. Evol.* **15**, 118–123.

McGowan, G. & Evans, S. E. 1995 Albanerpetontid amphibians from the Cretaceous of Spain. *Nature* **373**, 143–145.

Meyer, A. 1995 Molecular evidence on the origin of tetrapods and the relationships of the coelacanth. *Trends Ecol. Evol.* **10**, 111–116.

Milner, A. R. 1993 The paleozoic relatives of lissamphibians. *Herpetol. Monogr.* **7**, 8–27.

Motani, R., Minoura, N. & Ando, T. 1998 Ichthyosaurian relationships illuminated by new primitive skeletons from Japan. *Nature* **393**, 255–257.

Page, R. D. M. & Charleston, M. A. 1998 Trees within trees: phylogeny and historical associations. *Trends Ecol. Evol.* **13**, 356–359.

Paton, R. L., Smithson, T. R. & Clack, J. A. 1999 An amniote-like skeleton from the early Carboniferous of Scotland. *Nature* **398**, 508–513.

Philippe, H. 1993 MUST a computer package for management utilitarians for sequences and trees. *Nucleic Acids Res.* **21**, 5264–5272.

Piveteau, J. 1936*a* Origine et évolution morphologique des amphibiens anoures. *C. R. Hebd. Séances Acad. Sci.* **203**, 1084–1086.

Piveteau, J. 1936*b* Une forme ancestrale des amphibiens anoures dans le Trias inferieur de Madagascar. *C. R. Acad. Sci. Paris, Ser. III* **102**, 1607–1608.

Rage, J.-C. & Janvier, P. 1982 Le problème de la monophylie des amphibiens actuels, à la lumière des nouvelles données sur les affinités des tétrapodes. *Geobios* **6**, 65–83.

Rage, J.-C. & Rocek, Z. 1989 Redescription of *Triadobatrachus massinoti* (Piveteau, 1936) an anuran amphibian from the early Triassic. *Paleontogr. Abt.* A **206**, 1–16.

Reisz, R. R. 1997 The origin and early evolutionary history of amniotes. *Trends Ecol. Evol.* **12**, 218–222.

Rieppel, O. 1999 Turtle origins. *Science* **283**, 945–946.

Rohde, K. 1996 Robust phylogenies and adaptive radiations: a critical examination of methods used to identify key innovations. *Am. Nat.* **148**, 481–500.

Rougier, G. W., De la Fuente, M. S. & Arcucci, A. B. 1995 Late triassic turtles from South America. *Science* **268**, 855–858.

Rougier, G., De la Fuente, M. & Arcucci, A. 1998 L'évolution des tortues. *Pour Sci.* **249**, 42–49.

Rzhetsky, A. & Nei, M. 1993 *Metree: program package for inferring and testing minimum evolution trees*, v. 1.2. University Park, PA: The Pennsylvania State University.

Shubin, N. H. & Jenkins Jr, F. A. 1995 An early Jurassic jumping frog. *Nature* **377**, 49–52.

Sinnappah, N. D., Lim, L.-H. S., Rohde, K., Tinsley, R., Combes, C. & Verneau, O. 2001 A paedomorphic parasite associated with a neotenic amphibian host: phylogenetic evidence suggests a revised systematic position for Sphyranuridae within anuran and turtle polystomatoineans. *Mol. Phylogenet. Evol.* **18**, 189–201.

Strimmer, K. & Von Haeseler, A. 1996 Quartet puzzling: a quartet maximum likelihood method for reconstructing tree topologies. *Mol. Biol. Evol.* **13**, 964–969.

Swofford, D. L. 1998 *Paup* phylogenetic analysis using parsimony (*and other methods)*, v. 4. Sunderland, MA: Sinauer.

Takezaki, N., Razhetsky, A. & Nei, M. 1995 Phylogenetic test of the molecular clock and linearized trees. *Mol. Biol. Evol.* **12**, 823–833.

Trueb, L. & Cloutier, R. 1991 A phylogenetic investigation of their inter- and intrarelationships of the Lissamphibia (Amphibia: Temnospondyli). In *Origins of the higher groups of tetrapods: controversy and consensus* (ed. H.-P. Schultze & L. Trueb), pp. 223–313. Ithaca, NY: Cornell University Press.

Zardoya, R. & Meyer, A. 1996 Evolutionary relationships of the coelacanth, lungfishes, and tetrapods based on the 28S ribosomal RNA gene. *Proc. Natl Acad. Sci. USA* **93**, 5449–5454.

Zardoya, R. & Meyer, A. 1997 Molecular phylogenetic information on the identity of the closest relative(s) of land vertebrates. *Naturwissenschaften* **84**, 389–397.

Zardoya, R. & Meyer, A. 2001 On the origin of and phylogenetic relationships among living amphibians. *Proc. Natl Acad. Sci. USA* **98**, 7380–7383.

Zardoya, R., Cao, Y., Hasegawa, M. & Meyer, A. 1998 Searching for the closest relative(s) of tetrapods through evolutionary analyses of mitochondrial and nuclear data. *Mol. Biol. Evol.* **15**, 506–517.

As this paper exceeds the maximum length normally permitted, the authors have agreed to contribute to production costs.