Capturing *Cryptosporidium*

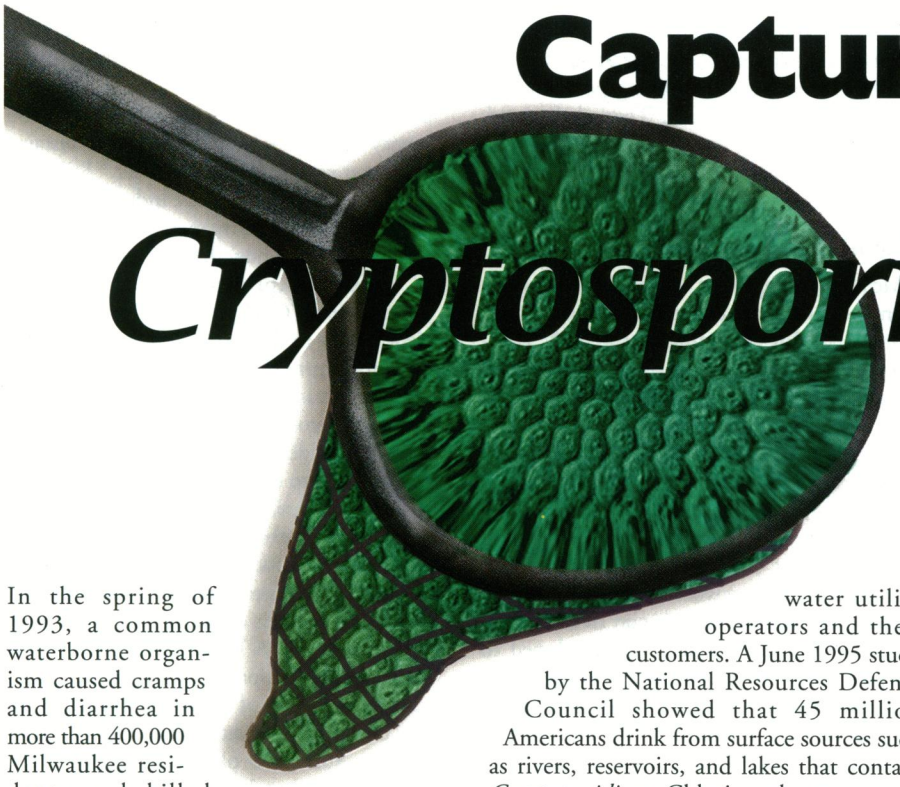

In the spring of 1993, a common waterborne organism caused cramps and diarrhea in more than 400,000 Milwaukee residents and killed more than 100 people with weakened immune systems, primarily AIDS patients. The culprit, a protozoan parasite named *Cryptosporidium* (commonly referred to as "crypto"), has struck again several times since that incident. The water works industry and national and state health officials have mounted a massive effort to keep *Cryptosporidium* out of drinking water. But the weakest link in this effort is the accepted method for detecting the parasite in drinking water samples.

This spring, researchers at the National Farm Medicine Center (NFMC), the rural health research division of the Marshfield Clinic in Marshfield, Wisconsin, finished preliminary testing of a technique that appears to offer a more effective and easier way of concentrating crypto in water samples. Their work may be one step in the struggle to prevent cryptosporidiosis and other emerging waterborne diseases.

Hard to Capture, Hard to Kill

Cryptosporidiosis begins with ingestion of *Cryptosporidium* as a reproductive oocyst that continues its life cycle in the gastrointestinal tract. The parasite infects humans and animals alike. "It can be transmitted by food handlers, or by one infected kid in a day care center, via the fecal–oral route," says Jon Standridge, a water microbiologist at the Wisconsin State Laboratory of Hygiene. "But it can also be transmitted through water."

It is the waterborne crypto that worries water utility operators and their customers. A June 1995 study by the National Resources Defense Council showed that 45 million Americans drink from surface sources such as rivers, reservoirs, and lakes that contain *Cryptosporidium*. Chlorine, the most commonly used water disinfectant for killing *Giardia* and other waterborne organisms, is less effective against crypto. As few as 10–25 oocysts can cause infection upon penetrating the healthy human immune system. And, while the disease is usually self-limiting in healthy people, consisting of 2–10 days of symptoms, in people with immature or impaired immune systems (children, AIDS patients, and the growing population of elderly people), it can cause chronic, cholera-like diarrhea that can kill through dehydration. Tracking incidence rates of cryptosporidiosis is tricky because cryptosporidiosis is not a reportable disease in many states. And even when crypto has been identified as the disease agent, there is no fully effective drug to treat it.

Concentrating (or capturing), identifying, and killing *Cryptosporidium* are separate and complex problems. The NFMC's method addresses the problem of concentration. The method of detecting crypto recommended by the EPA involves filtration to concentrate the oocysts from 100-liter samples of raw water or 1,000-liter samples of treated water, immunofluorescent staining, and microscopic analysis.

But the EPA-approved filtration method has limitations in terms of time and efficiency, according to Mark Borchardt, director of the NFMC's environmental health laboratory. "You filter a 100-liter sample through a yarn cartridge filter with a 1-micron pore size," he says. "Then comes the tough part. You have to dissect the filter and wring it out [to release the oocysts]. Then you spin down the material trapped in the filter using bulk centrifugation, and float the oocysts on a percol–sucrose density gradient. It's very time-consuming. And the EPA study suggests that when the density of oocysts is low, you're unlikely to find them; but it doesn't take many to make you sick." A recent blind survey by the EPA that used samples spiked with *Cryptosporidium* showed that the currently accepted procedure captures as little as 3% of the crypto.

The method developed at the NFMC, on the other hand, captured nearly 100% of organisms spiked into the sample during its first eight months of test use. "It's more efficient and less labor-intensive," says Borchardt. "And it can run continuously so that you can do continuous subsampling."

Borchardt and his colleague, Susan Spencer, tested two channel-type continuous centrifuges, an IBM model 2997 and a COBE Spectra, which are normally used to separate blood components according to their specific gravity. The centrifuges were simplified by disabling features normally used for donor safety, and a surfactant was added to enhance the removal of debris. Then, uncontaminated water from a local pond and phosphate-buffered saline (PBS) spiked with known quantities of *Cryptosporidium* oocysts (between 5 and 1,000 per liter) were pumped through the whole blood input line. The researchers then tested for various sample feed rates (from 70 ml/minute to 500 ml/minute) and turbidity (between 2.6 and 30.8 nephelometric turbidity units—a measure of cloudiness in water). The samples were centrifuged at 2,400 rpm and the material that remained in the blood separation channel was examined using standard

immunofluorescent assays. At the optimal speed of 150 ml/minute, the researchers obtained a recovery rate of nearly 100% for *Cryptosporidium* oocysts, with no variation from turbidity. They obtained a similar rate of concentration for pond water and PBS spiked with the protozoan parasite *Giardia*.

Researchers at the NFMC hope to eventually work with manufacturers to reengineer the centrifuges so that their method can be put to use by public and private water utilities. "We're satisfied that the method works for the ponds that we have access to, and within a reasonable range of turbidity, at the flow rates that we're using," Borchardt says. "But we want to compare our method with other methods of concentration, such as calcium carbonate precipitation and centrifugation with bowl-type continuous centrifuges. We want to try the channel centrifuge with a variety of water sources. We also want to test the method for concentration of other waterborne pathogens of different sizes, such as *Campylobacter*, *Salmonella*, *Shigella*, and toxic dinoflagellates." Borchardt envisions 12–18 months of further testing.

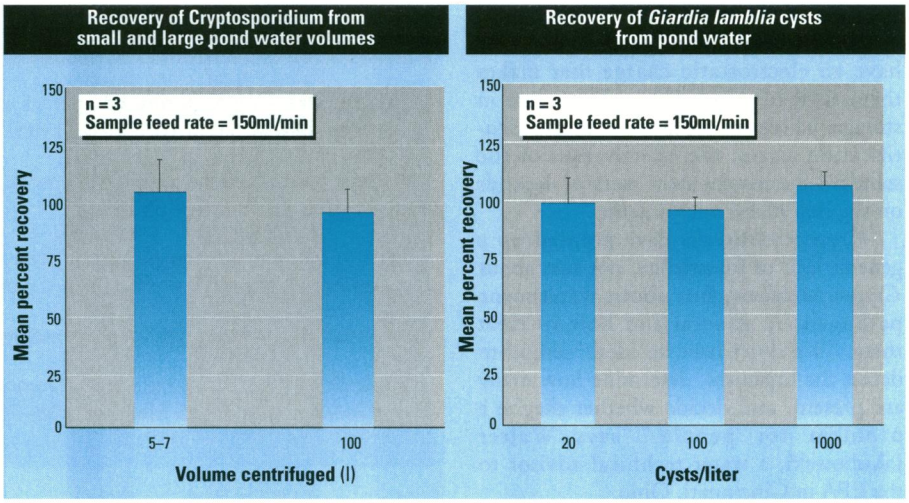

Source: Borchardt MA and Spencer SK, Concentrating *Cryptosporidium* and *Giardia* using a channel-type continuous centrifuge. Poster presentation to the Wisconsin State Chapter Meeting of the American Water Resources Association, Minoqua, Wisconsin, February 1996.

Only a Beginning

Microbiologists and water quality professionals say that research on *Cryptosporidium* is complicated and still at an early stage, and that technology that may work for large water utilities may not work for small ones. But given the absence of consensus and information on dealing with crypto, they guardedly call the NFMC's technique promising.

"We need all the help we can get. The biggest advantage that I see is that market pressures are driving commercial ventures and getting people to pull together and get creative to solve this problem," says Mark Le Chevallier, director of research for the American Water Works Service Company, Inc., which is part of a network of investor-owned water utilities in 21 states. "This method replaces two steps—filtration and centrifugation—with one," Le Chevallier said. "We do have losses [with the present method of] filtration and concentration. But a good method of concentrating oocysts doesn't solve all our problems. Concentration is one of many steps."

The expense and portability of the NFMC's centrifuge also troubles some researchers. A ballpark figure for a reengineered centrifuge is $5,000–$10,000, and the belts used for concentration cost about $100 each. "You'd have to have it on site," says Le Chevallier. "And there are 67,000 water systems in the U.S. that can't afford it."

Another worry, researchers say, is the low speed of the channel-type centrifuge. It works at about 100 ml/minute, while the present filtration method works at 4 liters/minute. With the large volumes called for by the EPA testing procedure, "this drawback is overwhelming," says Stephen Schaub, a senior microbiologist at the EPA's Office of Water in Washington, DC. "You can collect 100 liters in less than 30 minutes with the present method. If you could scale the flow up to liters per minute, the continuous centrifugation methods could be more acceptable."

Even if the NFMC's device can be modified to work for any volume or system, researchers say, it won't solve the *Cryptosporidium* riddle. The organism is difficult to work with. "There's a joke in

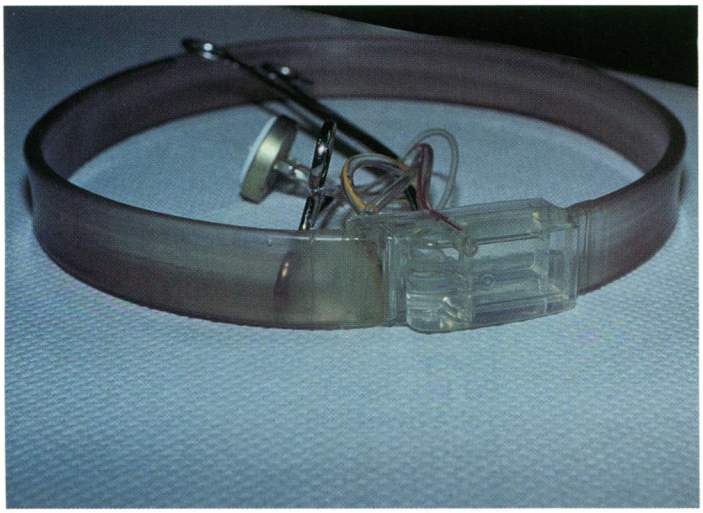

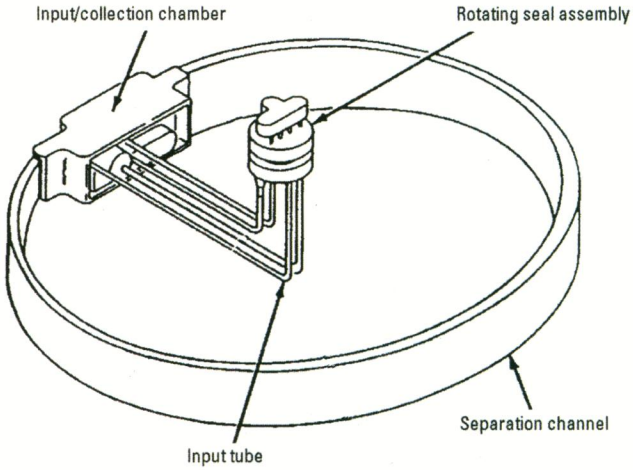

left: Mark Borchardt, right: IBM/COBE

The force of gravity. A modified centrifuge could vastly improve the way *Cryptosporidium* is detected in water samples because it separates the water components by specific gravity, avoiding many of the problems associated with traditional filtration techniques.

the lab that the oocysts get beamed up to the mother ship," says Standridge. "They have an electrostatic charge that makes them stick to things. They deteriorate in storage. There are problems with the identification stages; the effectiveness of the standard fluorescent stain method depends on the skill of the microscopist."

Crypto outbreaks have pointed up a general lack of knowledge, not just about *Cryptosporidium*, but about waterborne pathogens in general and how to treat them. "We don't have an ideal method to detect the organism, determine how many are present, and decide whether they're a problem for people," says Walter Jakubowski, a water technical advisor to the EPA in Cincinnati, Ohio.

If future regulations are modified to decrease sample volume, the NFMC's device may serve as one of several options for sample processing. "This device might work for smaller samples of 10 or 20 liters. Many of the problems we have with the present filtration method have to do with the large volumes we're required to sample," says Jakubowski. According to him, although large volume samples (100 liters or more) are collected, only relatively small portions (usually 1 liter) of the sample are actually examined.

Dealing with *Cryptosporidium* and other pathogens, experts say, will require advances in regulation as well as research to prepare for what may—or may not—be a new wave of waterborne pathogens. "In the 1920s, we had waterborne typhoid and the polio virus was also waterborne," says Standridge. "Chlorine eliminated them, and we've kind of gone along merrily with no organisms breaking through that barrier. Now this waterborne pathogen has emerged. We're also worried about other organisms like *Microsporidia* and *Cyclospora*." The NFMC's centrifuge, Standridge says, is just one of several methods that need to be tested. "It's a big effort," says Schaub, "and we're just getting started."

Stephanie Joyce

Suggested Reading

Juranek DD. Cryptosporidiosis: sources of infection and guidelines for prevention. Clin Infect Dis 21(Suppl 1):S57–61 (1995).

Roberson JA, Sullivan JH. *Cryptosporidium*: what we know and don't know. Health Environ Dig 8(8):63–65 (1994).

Seeman PR, ed. New methodology from the National Farm Medicine Center concentrates *Cryptosporidium* efficiently. Cryptosporidium Capsule 1(6) (April 1996).

Newman A. Analyzing for *Cryptosporidium*. Anal Chem 67(23):731A–734A (1995).

Pelehack L. When drinking water becomes hazardous to the public's health: the threat of *Cryptosporidium*. Lab Med 21(1):28–35 (1996).

First International Conference on Emerging Zoonoses

Holiday Inn Crowne Plaza
Jerusalem, Israel
November 24–28, 1996

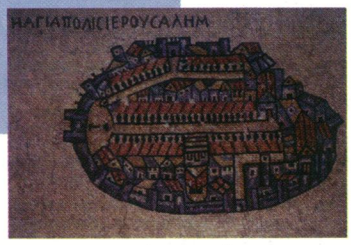

Co-Sponsored by the Centers for Disease Control

For further information:
Emerging Zoonoses
PO Box 29041
Tel Aviv 61290
Israel
972 3 5175149/50
Fax: 972 3 517 5155