Research Article | Vol. 9, No. 10 | 1 Oct 2018 | BIOMEDICAL OPTICS EXPRESS 5026

Biomedical Optics EXPRESS

Use of a DPSS Er:YAG laser for the selective removal of composite from tooth surfaces

WILLIAM A. FRIED, KENNETH H. CHAN, CYNTHIA L. DARLING, AND DANIEL FRIED*

Department of Preventive and Restorative Dental Sciences, University of California, San Francisco, 707 Parnassus Ave, San Francisco, CA 94143, USA
*daniel.fried@ucsf.edu

Abstract: New diode-pumped solid state (DPSS) Er:YAG lasers have become available operating at high pulse repetition rates. These lasers are ideally suited for integration with laser scanning systems for the selective removal of dental decay and composite restorative materials from tooth surfaces. The purpose of this study was to determine if a DPSS Er:YAG laser system is suitable for the selective removal of composite from tooth surfaces. Relative ablation rates of composite and enamel were determined and composite was removed from tooth surfaces using a DPSS Er:YAG laser. Composite was removed very rapidly with ablation rates approaching 50-µm per pulse. A fluence of ~50 J/cm^2 appeared optimal for the removal of composite and damage to the enamel was limited to less than 100-µm after the removal of composite as thick as 700-800-µm; however, dentin is removed at similar rates to composite. The DPSS Er:YAG laser appears to be better suited for the removal of composite than conventional flash-lamp pumped Er:YAG lasers since composite is ablated at higher rates than dental enamel and the high pulse repetition rates enable greater selectivity while maintaining high removal rates.

© 2018 Optical Society of America under the terms of the OSA Open Access Publishing Agreement

1. Introduction

Dental composites are used as restorative materials for filling cavities, shaping, and covering teeth for esthetic purposes, and as adhesives. Dentists spend more time replacing existing restorations that fail due to microleakage and secondary caries than they do placing new restorations [1,2]. Tooth colored restorations are difficult to differentiate from the surrounding tooth structure and adhere strongly to the underlying enamel and dentin making them challenging to remove without damaging tooth structure. Hence, the clinician frequently removes excessive amounts of healthy tooth structure to ensure complete removal of the composite [3,4]. Therefore, a system that can rapidly remove composite from tooth surfaces while minimizing the inadvertent removal of healthy tooth structure would be a significant improvement over current methods.

Dental composites typically consist of a resin-based oligomer matrix, such as a bisphenol A-glycidyl methacrylate (BISGMA) or a similar resin and an inorganic filler such as silica or quartz. The rate of composite removal has been found to vary with the filler content with more highly filled composites being ablated at lower rates [5]. Most dentists use hybrid composites which are ~80% by weight filler. The two composites used in this study are hybrid composites. It is important that the entire composite is ablated without major thermal modification of the composite. Burning off the resin leaves a residual layer of carbon and silica that is more difficult to remove. Therefore, it is important to minimize peripheral damage during composite removal and water-cooling is necessary.

#335323 https://doi.org/10.1364/BOE.9.005026
Journal © 2018 Received 20 Jun 2018; revised 8 Aug 2018; accepted 16 Sep 2018; published 27 Sep 2018

Biomedical Optics EXPRESS

Table 1. Comparison of enamel and composite ablation rates from the literature.

Laser	Pulse Duration	Fluence	Ablation rate -µm per pulse		Ref.
			Enamel	Composite	
Q-switched Er:YSGG	150-ns	0-70 J/cm^2	15-20	15-25	[13]
Free-Running Er:YAG	200-450-µs	0-100 J/cm^2	*800	*1100	[5]
TEA CO_2 -10-6-µm	1-µs	0-65 J/cm^2	2-3-µm	10-12-µm	[13]
TEA CO_2 -9.3µm	10-15-µs	0-18 J/cm^2	7-10-µm	20-30-µm	[14]
Freq. Tripled Nd:YAG 355-nm	9-ns	0-14 J/cm^2	2-3-µm	15-20-µm	[15]

Recent studies have employed Er:YAG lasers to remove ceramic brackets, veneers, and crowns due to the selective absorption at the interface between the tooth surface and the adhesive [6–12]. In these procedures the preferential deposition of heat from the laser is used to soften the adhesive allowing the appliance to be removed from the tooth surface.

Composite can also be directly ablated from tooth surfaces and several different laser systems have been utilized for this purpose. Table 1 lists several different laser systems, their pulse duration and the rate at which they ablate enamel and composite. Composite can be removed from tooth buccal and occlusal surfaces at clinically relevant rates using microsecond pulsed CO_2 lasers [13,14]. The greatest differential in the ablation rate between composite and enamel has been achieved using 355-nm laser pulses of nanosecond duration [15–17]. However, the frequency tripled Nd:YAG laser is poorly suited for the removal of sound and demineralized dental hard tissues and utilizes UV radiation. It is safer and more economical to utilize a laser that can be used for multiple applications.

Studies have shown that free-running Er:YAG lasers (pulse duration > 200-µs) can be used to remove composite restorative materials as well, but a high degree of selectivity has not been observed [5,18,19]. In addition, the Er:YAG laser leaves an enamel surface that is rougher than that produced by conventional removal [20,21]. The use of shorter Q-switched Er:YSGG laser pulses [13] with a pulse duration of 150-ns was previously investigated for the removal of composite. The ablation threshold was lower for enamel than for composite and the ablation rate was only slightly higher for composite (20 vs. 15 µm) per pulse above 25 J/cm^2. Moreover, at 25 J/cm^2 the fluence was above the threshold for plasma shielding and the ablation rate was greatly reduced due to that shielding. In addition, the noise generated by the short lasers pulses exceeded levels acceptable for clinical use and the pulse repetition rate was limited to less than 10 Hz.

Spectral feedback can also be used for selective removal, since composite does not contain calcium and the strong calcium emission lines can be used to differentiate between composite and tooth structure for the selective removal of composite from tooth surfaces including residual composite on tooth buccal surfaces [13,14]. The selective removal of composite from the smooth buccal surfaces is more challenging than removing composite from other tooth surfaces since it is particularly important to minimize enamel loss from these highly visible tooth surfaces for esthetic reasons.

For selective removal, low energy pulses and small spot sizes are desirable to minimize the amount of tissue removed per laser pulse, therefore the laser has to be operated at high pulse repetition rates for practical removal rates. Until recently the only lasers that met this criteria were CO_2 lasers. The flash-lamp pumped erbium solid-state lasers presently being used for dental hard tissue ablation are not suitable for this approach since they utilize high energy pulses and relatively low pulse repetition rates. Diode pumped solid-state (DPSS) Er:YAG lasers are now available operating with pulse repetition rates as high as 1-2 kHz and initial studies have been carried out demonstrating their utility for the ablation of dental hard tissues and bone [22–24]. We have explored using this system for the removal of dental caries and composites [25–27].

Biomedical Optics EXPRESS

The purpose of this study is to explore the potential of using the DPSS Er:YAG laser for the selective removal of composite from tooth surfaces.

2. Methods

2.1 Sample preparation

For the ablation rate measurements of Section 2.4, blocks approximately 10 x 2 mm with the enamel at least 500-µm thick were prepared from bovine incisors. Composite discs at least a mm thick were prepared from Z250 composite from 3M (Minneapolis, MN) by sectioning a block of the cured composite. The thickness was measured with a digital indicator with 10-µm resolution. Composite was cured for 15 seconds using blue light according to the manufacturers instructions.

For the composite removal measurements of Section 2.5, layers between 400 and 800 µm thick of GrenGloo a hybrid composite from Ormco (Orange, CA) were applied to the bovine blocks for the composite removal samples. The Ortho Solo (Ormco) adhesive, and 37% phosphoric acid etchant were used according to the manufacturer's instructions. Grengloo composite changes color and appears green below body temperature. This helps to identify any residual composite missed by the laser. It also has similar composition to other hybrid composites such as Z250.

For the composite removal measurements of Section 2.6, hemisections of extracted human teeth were used and GrenGloo was applied to tooth facial surfaces. The teeth were collected from dental offices in the San Francisco Bay Area and sterilized with Gamma radiation and stored in deionized water with 0.1% thymol to prevent bacterial growth. Human subjects approval (UCSF IRB) was not needed since no patient identifiers were recorded.

2.2 Laser setup and parameters

Samples were irradiated using a DPSS Er:YAG laser, Model DPM-30 from Pantec Engineering, (Liechtenstein) operated at a pulse duration of 50-µs and a pulse repetition rate of 100-Hz. The laser energy output was monitored using a power meter EPM 1000, Coherent-Molectron (Santa Clara, CA), and the Joulemeter ED-200 from Gentec (Quebec, Canada). A high-speed XY-scanning system, Model ESP 301 controller with ILS100PP and VP-25AA stages from Newport (Irvine, CA) was used to scan the samples across the laser beam. Designated areas (boxes) on each tooth were irradiated by the laser. The laser was focused to a spot size of ~150-µm using an aspheric ZnSe lens of 25 mm focal length. The beam diameter was measured with a micrometer and knife-edge and the profile (thermal-image) was round. A pressure air-actuated fluid spray delivery system consisting of a 780S spray valve, a Valvemate 7040 controller, and a fluid reservoir from EFD, Inc. (East Providence, RI) were used to provide a uniform spray of fine water mist onto the tooth surfaces at 2 mL/min. A diagram of the laser setup is shown in Fig. 1. Air was also directed at the lens to protect the lens from the water spray.

2.3 Digital microscopy

Tooth surfaces were examined after laser irradiation using an optical microscopy/3D surface profilometry system, the VHX-1000 from Keyence (Elmwood, NJ). Two lenses were used, the VH-Z25 with a magnification from 25 to 175x and the VH-Z100R with a magnification of 100-1000x. Depth composition digital microscopy images and 3D images were acquired by scanning the image plane of the microscope and reconstructing a depth composition image with all points at optimum focus displayed in a 2D image. The Keyence 3-D measurement software, VHX-H3M, was used to correct the tilt of the sample and measure the variation in depth over the enamel and composite in the ablated areas. This software was used to measure the depth of the incisions for determination of the ablation rates and the depth of ablated

Biomedical Optics EXPRESS

composite and lost enamel for the removal of composite from bovine and human tooth surfaces.

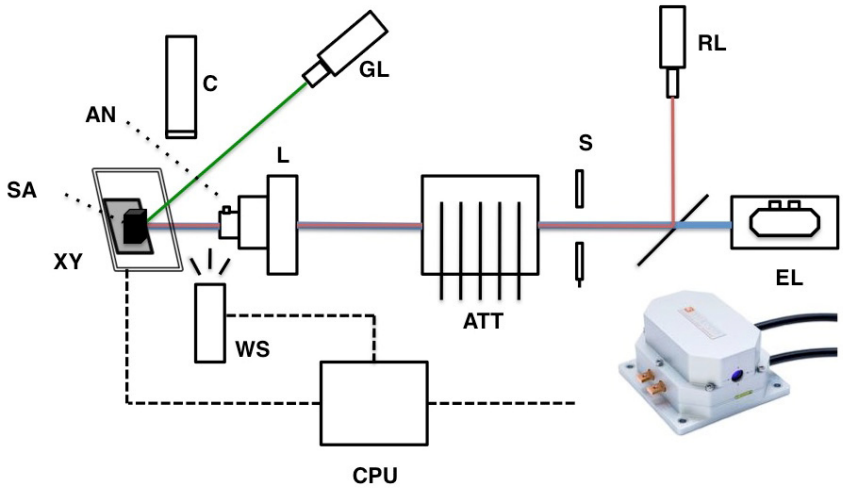

Fig. 1. Laser setup with DPSS Er:YAG laser (EL), Green and Red targeting lasers (GL & RL), shutter (S), glass slide attenuators (ATT), lens (L), XY stage (XY), sample (SA), air nozzle (AN), camera (C), water spray (WS) and computer (CPU). An image of the DPSS Er:YAG laser is shown on lower right.

2.4 Relative ablation rate measurements

Relative Er:YAG ablation rates were assessed using bovine enamel samples and Z250 composite sections. Incisions were produced by scanning the sample at a rate of 5 mm/sec with the pulse repetition rate fixed at 100 Hz. Each incision was produced by two passes in one direction. The ablation depths were measured using the VHX-1000 digital microscope. A range of fluence was assessed starting with the highest achievable fluence and progressively reducing the fluence using glass attenuators. Six incisions were produced for each fluence on six samples of bovine enamel and three samples of composite and the mean and standard deviation are reported. The single pulse ablation rates were calculated by dividing the incision depth by six. Each scan delivered 3 overlapping laser pulses over the 150-µm laser spot and there were two passes.

2.5 Composite removal from bovine enamel surfaces

A rectangular box was cut across the applied composite on the bovine enamel samples with the cut extending approximately ~1 mm beyond the composite. The laser was scanned in one direction and twenty scans were carried out separated by 25-µm for each iteration (laser spot size 150-µm). The samples were scanned at a rate of 5 mm/sec with the pulse repetition rate fixed at 100 Hz. Nine samples with varying incident fluence from 7 to 70 J/cm^2 were used. The iterations were repeated until the composite was completely removed along the center of the box. The axial focus position was adjusted manually to avoid stalling. The composite thickness and the damage to the underlying enamel was measured using the Keyence 3-D measurement software, VHX-H3M. The lateral and transverse damage measurements were averaged for each incident fluence.

Biomedical Optics EXPRESS

2.6 Composite removal from the surfaces of extracted teeth

A rectangular area of composite was placed on the facial surfaces of tooth hemisections mounted on delrin blocks. The laser was scanned over an area encompassing half the composite and exposed peripheral dentin and enamel as shown in Figs. 6. Three different irradiation intensities were tested for the selective removal of composite, 54, 31 and 24 J/cm^2. The laser was uniformly scanned across the areas with a spot separation of 100 µm (150-µm spot size) and a pulse repetition rate of 100-Hz with a scan rate of 5 mm/sec. A larger spot separation was used for faster composite removal rates since the composite was removed over the entire area. A typical area scanned was 3 x 5 mm. Scanning iterations were repeated until composite was completely removed within the center of the box or no further removal was noted. Cross-polarization optical coherence tomography was used to measure the composite on the human tooth surfaces before and after removal and Avizo 3D imaging software from FEI (Hillsboro, OR) was used to calculate the volume of composite removed and the volume of dental hard tissue lost.

2.7 Cross-polarization optical coherence tomography (CP-OCT)

A cross-polarization OCT system purchased from Santec (Komaki, Aichi, Japan) was used to acquire 3D tomographic images of sound, cavitated, and noncavitated lesion stages on the samples. This system acquires only the cross-polarization image (CP-OCT), not both the cross and co-polarization images (PS-OCT). The device, Model IVS-300-CP, utilizes a swept laser source; Santec Model HSL- 200-30 operating with a 33 kHz a-scan sweep rate. The interferometer is integrated into the handpiece that also contains the microelectromechanical (MEMS) scanning mirror and the imaging optics. This CP-OCT system can acquire complete tomographic images of a volume 6x6x7 mm in size in ~3 seconds. This system operates at a wavelength of 1321 nm with a bandwidth of 111 nm with a measured axial resolution in air of 11.4 µm (3 dB). The lateral resolution is 80-µm (1/e^2) with a transverse imaging window of 6x6 mm and a measured imaging depth of 7 mm in air. The polarization extinction ratio was measured to be 32 dB. Image registration and 3D volumetric measurements of the composite removed and the damage to the underlying enamel were measured using Avizo 3D imaging software. The volume of the composite and enamel/dentin removed was recorded for each fluence.

3. Results

3.1 Relative ablation rate measurements

Two digital 3D images of incisions produced in enamel and composite at the same fluence are shown in Fig. 2. The composite incisions were typically deeper, cleaner, and more uniform for the same fluence. For irradiation intensities below 15 J/cm^2, digital microscopy showed that the enamel surface was actually raised after irradiation. Figure 3 shows images of the enamel surface irradiated at 10 and 15 J/cm^2. The surface of the irradiated area is higher and little ablation has occurred. At the higher fluence of 15 J/cm^2 the ablation is highly irregular. For an incident fluence of 35 J/cm^2 the rate of composite removal was three times the rate of enamel removal. A plot of the ablation depth versus fluence is shown in Fig. 4. The range of fluence between 25 and 50 J/cm^2 appears to offer the greatest difference in ablation rate with a 3-5 times higher ablation rate for composite versus enamel. The ablation rate is also quite variable with a fairly high standard deviation. Above 40 J/cm^2 the mean ablation rate of composite is high exceeding 40-µm per pulse.

Biomedical Optics EXPRESS

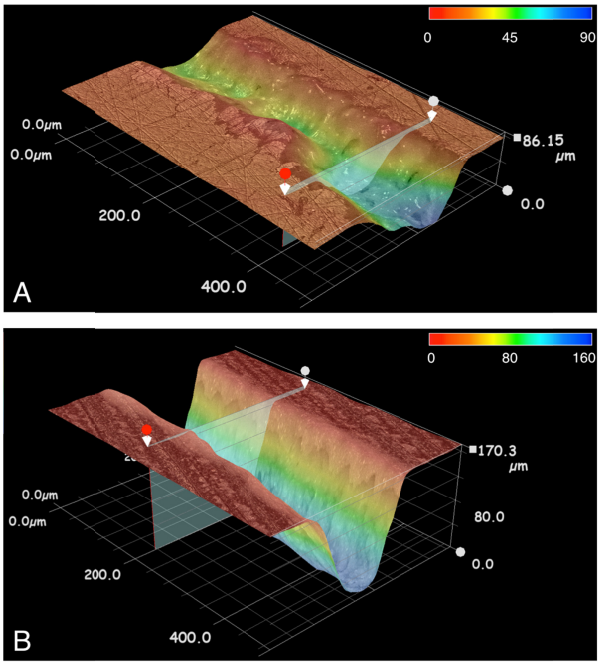

Fig. 2. 3D digital images of incisions produced in enamel and composite at an incident fluence of 35 J/cm^2 for the same number of laser pulses. (A) Enamel at 700x magnification. The depth at the marked area is 54-µm. (B) Composite at 700x magnification. The depth at the marked area is 152-µm. The color bars show the differential depth in microns.

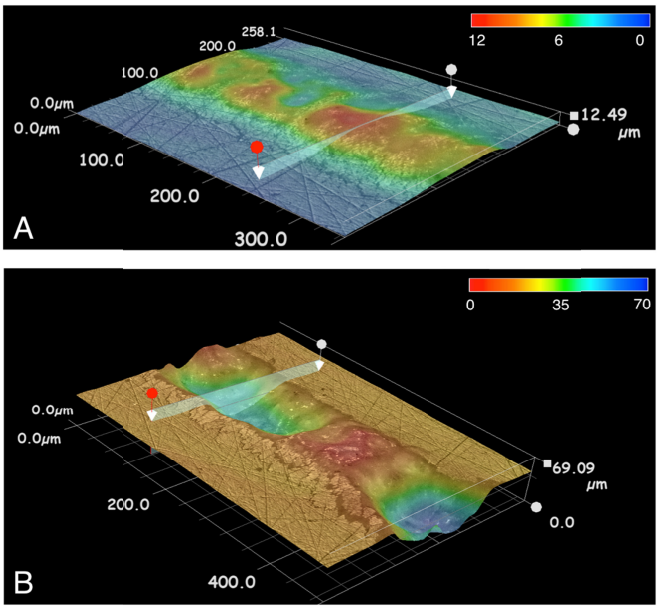

Fig. 3. 3D digital images of the surface changes produced in enamel for the same number of laser pulses. (A) At an incident fluence of 10 J/cm^2 there was a rise in the irradiated enamel surface of ~10-µm. The magnification is 1000x. (B) At an incident fluence of 15 J/cm^2, there was great variation in the depth of the cut, the depth at the marked area is 20-µm. The magnification is 700x. The color bars show the differential depth in microns.

Biomedical Optics EXPRESS

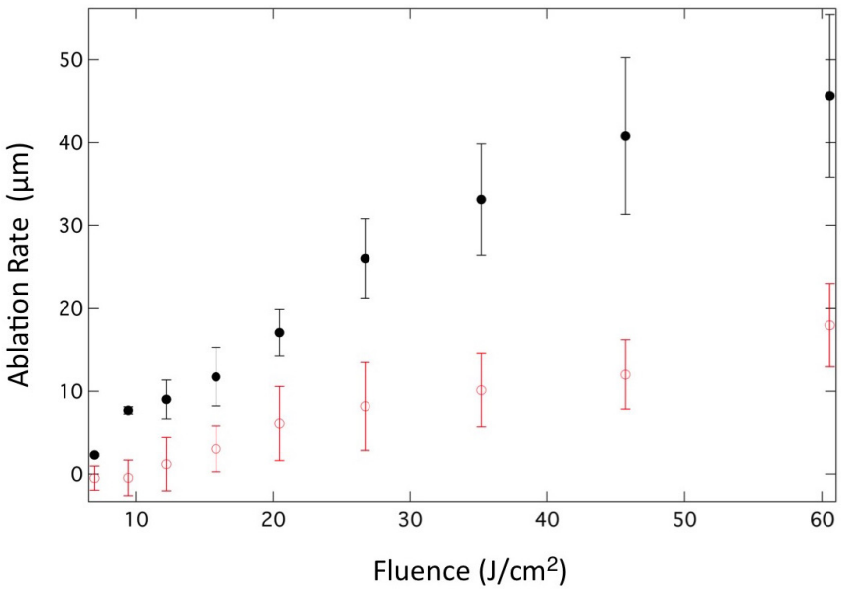

Fig. 4. Relative single pulse ablation rates are shown for enamel (open circles) versus composite (solid circles). The mean ± s.d. are shown with 6 measurements per point.

3.2 Composite removal from bovine enamel surfaces

Typically the underlying enamel had a rough appearance and enamel was lost. However, in some cases the enamel was left intact even at a relatively high intensity. An example is shown in Fig. 5 for an incident fluence of 17 J/cm^2. Areas of variable enamel damage are indicated both in the irradiated areas that were originally covered by composite and the exposed enamel adjacent to the composite. Many craze lines are visible in the area of irradiated enamel.

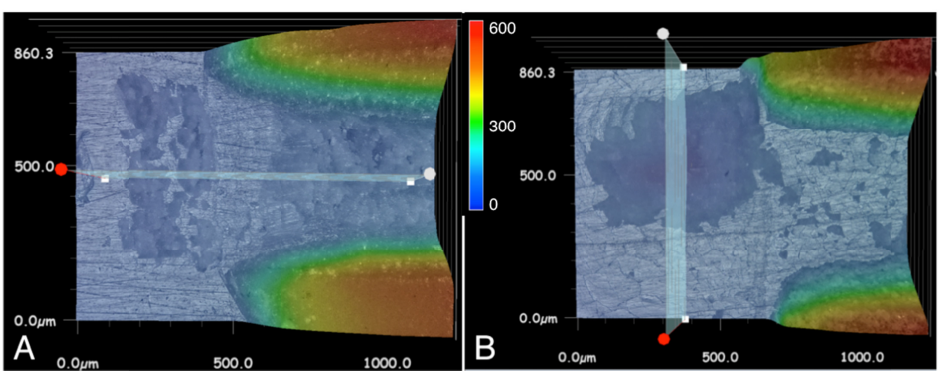

Fig. 5. 3D digital images of bovine enamel surfaces after removal of composite at an incident fluence of 10 J/cm^2 (A) and 17 J/cm^2 (B). Much of the enamel surface is intact that was under the composite and in the areas irradiated by the laser peripheral to the composite. The maximum depth of the damaged irradiated enamel at the indicated line profiles is 26-µm and 52-µm for (A) and (B) respectively. The magnification is 300x and the color bar shows the differential height in microns for both images.

The enamel loss was measured after the removal of composite with a thickness between 500 & 750-µm for incident fluence from 7 to 70 J/cm^2. The enamel loss was 20-µm at 7 J/cm^2, 50-µm at 10, 13, 17 J/cm^2, 75 µm at 29, 38, 50 and 200 µm at 70 J/cm^2. The enamel loss below 50 J/cm^2 was limited to less than 100-µm even though 500-750-µm of composite was removed. The rate of composite removal was reduced for lower fluence, therefore the

Biomedical Optics EXPRESS

number of laser pulses incident on the exposed enamel was greater. The number of scans required to completely remove the composite was not recorded. The GrenGloo composite is colored green and any residual composite was clearly visible. Moreover, the magnetic sample holder could be removed so that the samples could be closely inspected to ensure that the composite was removed at the base of the laser cuts. It appears that the fluence range of 30-50 J/cm^2 is best suited for composite removal.

3.3. Composite removal from tooth surfaces

GrenGloo composite was added to the facial surfaces of five extracted premolars and molars, approximately 1-mm thick in a rectangle 3 x 6 mm overlapping both the crown and root surfaces as shown in Fig. 6. The laser was scanned over half of the composite and over the uncovered enamel and dentin until the composite was removed and the volume of composite, enamel and dentin removed was measured using optical coherence tomography. Three different irradiation intensities were tested for the selective removal of composite, 54, 31 and 24 J/cm^2. Lower fluences were not tested as it was found that large amounts of composite remained intact at 24 J/cm^2. At 24 J/cm^2, there was remaining composite in the areas scanned by the laser system. At the highest fluence of 54 J/cm^2, all of the composite was successfully removed from the target area. This can be seen in Fig. 6, which also shows both a reflected light image of the tooth surface and different renderings of the 3D CP-OCT images.

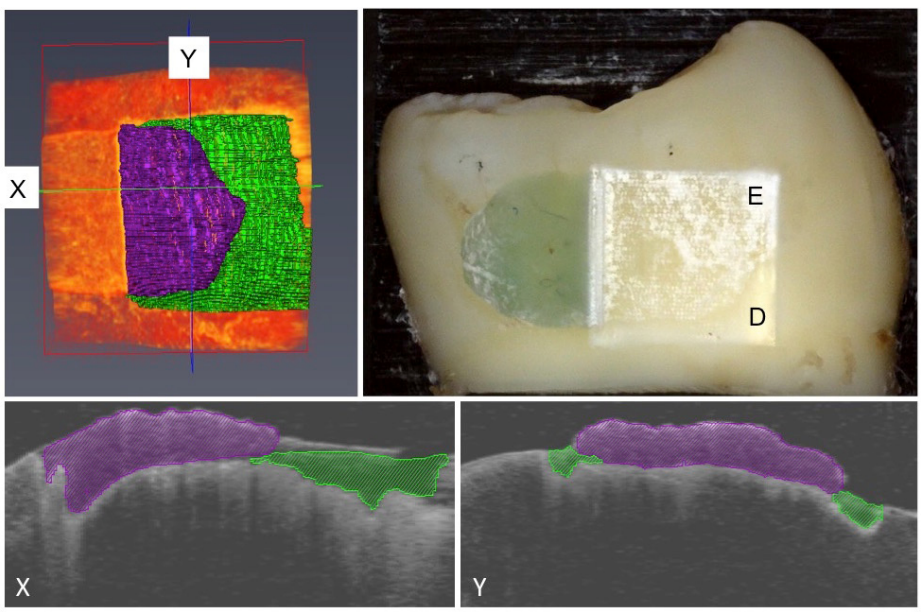

Fig. 6. Images of a tooth hemisection after the laser was scanned in a square area encompassing half the composite and areas of both enamel and dentin at a fluence of 54 J/cm^2 to completely remove the composite in that area. A visible reflectance image is shown of the tooth on the upper right and a rendered surface of the 3D OCT image is shown on the upper left. Composite removed is purple and lost enamel and dentin is shown in green. Extracted line profiles (b-scans) are shown at the indicated X and Y positions shown below.

The ratio of enamel/dentin lost vs. composite was calculated for each of three irradiation intensities tested. For the two samples scanned at 54 J/cm^2, the first had 2.04 mm^3 of composite removed for 1.53 mm^3 of enamel/dentin lost after four scans. This gives a ratio of composite removed/ enamel removed of 1.33. The second had 2.25 mm^3 of composite removed and 0.470 mm^3 of enamel removed over 8 scans, giving it a ratio of 4.79 which was also the highest ratio of composite removed/ enamel removed.

Biomedical Optics EXPRESS

For the sample scanned at a fluence of 31.1 J/cm^2 only a minimal amount of composite remained in the areas scanned and 1.24 mm^3 of composite and 0.733 mm^3 of enamel removed after seven scans. The ratio of composite removed/ enamel removed was 1.69. At a fluence of 24 J/cm^2, the laser system was only able to partially remove the composite before stalling occurred.

4. Discussion

The differential ablation rate for composite vs. enamel is most favorable for laser irradiation intensities above 40 J/cm^2. Examination of Fig. 4 also suggests that the ablation rate approaches a plateau near 50-60 J/cm^2 and that the use of higher irradiation intensities would likely result in a decrease in the efficiency of ablation. The plateau is likely the result of debris and plasma shielding. In addition, the single pulse ablation rates for the 50-µs pulses are quite high for composite, near 50-µm per pulse. It is interesting to compare these results with the results from the shorter Q-switched Er:YSGG laser pulses [13]. The single pulse ablation rate for enamel peaks at around 10-15-µm for both the 150-ns and 50-µs pulses above 20 J/cm^2. For the 150-ns pulses the composite ablation rate also peaks at 20 J/cm^2 and is similar to the 50-µs pulses at that fluence. However, above 40-50 J/cm^2 the peak single pulse ablation rate for the composite is more than twice as for the 50-µs pulses vs. the 150-ns pulses. This suggests that plasma shielding on composite surfaces for the shorter 150-ns Er:YSGG laser pulses greatly restricts the ablation rate and reduces efficiency. Previous studies have indicated that shorter laser pulses are advantageous for reducing thermal damage to peripheral dentin [28,29], however if the pulses are too short plasma shielding reduces the ablation rate and efficiency and it is only necessary to reduce the pulse duration to near the thermal relaxation time which is on the order of tens of microseconds for enamel and dentin at erbium wavelengths to minimize thermal damage [30].

Another concern with ablation using high-energy and Q-switched Er:YAG laser pulses is that the acoustic and mechanical effects are very strong. The noise levels with Q-switched Er:YAG laser pulses exceed levels acceptable for clinical use and the strong shock waves can cause mechanical failure in dental hard tissues [31]. For free-running Er:YAG lasers used for hard tissue ablation, the pulse repetition rates are limited and typically very high single pulse energies of several hundred millijoules per pulse are used to increase the speed of tissue removal. Therefore the noise levels and shock waves are quite strong for those pulses. In this study, the sound levels generated during hard tissue and composite ablation for the DPSS laser pulses, 10-mJ pulses of 50-µs duration, were barely audible which is a major advantage for clinical use.

It is interesting that some of the bovine enamel surfaces under the composite remained intact without any enamel loss. Even for incident fluence as high as 50 J/cm^2, there were areas of irradiated enamel in which the surface remained intact. Absorption at the interface and delamination can explain how the composite is removed while the enamel remains intact. This phenomenon has been observed for ceramic brackets, veneers, and crowns due to the selective absorption at the interface between the tooth surface and the adhesive [6–12]. However, this does not explain how the exposed areas are preserved.

This is one of the first studies to employ digital microscopy to study laser irradiated surfaces and one of the most interesting observations was that at incident fluence below the threshold for the ablation of enamel, the laser irradiation caused a permanent rise in the enamel surface. The observation suggests that absorption of the laser irradiation by water and the higher pressures of that heated water below the enamel surface were sufficient to cause deformation of the enamel, but were not sufficient to cause explosive removal of enamel. This observation supports the thermo-mechanical nature of hard tissue ablation at this wavelength.

The differential ablation rate between composite and enamel in this study was higher than was previously observed with either free-running or Q-switched laser pulses. The smaller spot size and lower single pulse energies employed using the DPSS Er:YAG laser are

Biomedical Optics EXPRESS

advantageous for minimizing peripheral damage to enamel and dentin and for increasing selectivity.

Future studies will focus on the use of methods for feedback for further increasing selectivity and for identifying when the composite has been removed. Spectral feedback has proved successful for UV [15–17] and carbon dioxide laser systems [14] for the removal of composite from tooth surfaces, however it may be difficult to use spectral feedback with the smaller plume produced with the DPSS Er:YAG laser. Near-IR image-guided ablation is another promising approach, the water content in tooth structure is much higher than for composite and at near-IR wavelengths greater than 1400-nm, there is high contrast between composites and tooth structure even though the composites are color matched to the tooth. Near-IR images can be taken of tooth surfaces and used to guide the laser scanning system in a similar fashion to what has been done for the selective removal of carious lesions. A major concern regarding use of the DPSS Er:YAG laser pulses on enamel surfaces is the marked roughening caused by the laser. Close inspection of the enamel (E) areas in Figs. 6 irradiated by the Er:YAG laser show large increases in reflectivity, i.e., the ablated enamel appears much whiter than the peripheral sound enamel or irradiated dentin. This is a serious concern since those areas will have to be further processed for esthetic concerns. Moreover, the reflectivity is also high in the NIR which is likely to interfere with the use of NIR reflectance measurements for image-guided ablation. A similar large increase in reflectivity is not observed for the CO_2 laser [32]. Methods will need to be developed to reduce that roughness. Altshuler et al. [33] have proposed the addition of particles to the water spray that will improve the ablation rate and smooth the walls of the ablation craters.

In conclusion, these studies indicate that the diode-pumped solid state Er:YAG laser with its high pulse repetition rate holds great potential for the removal of dental composites from tooth surfaces.

Funding

NIH/NIDCR (Grant R01-DE19631).

Acknowledgments

This work was supported by NIH/NIDCR Grant R01-DE19631 and we acknowledge Jamison M. Jew and Jin W. Kim.

Disclosures

The authors declare that there are no conflicts of interest related to this article.

References

1. V. V. Gordan, C. W. Garvan, J. S. Richman, J. L. Fellows, D. B. Rindal, V. Qvist, M. W. Heft, O. D. Williams, and G. H. Gilbert; DPBRN Collaborative Group, "How dentists diagnose and treat defective restorations: evidence from the dental practice-based research network," Oper. Dent. **34**(6), 664–673 (2009).
2. M. Bernardo, H. Luis, M. D. Martin, B. G. Leroux, T. Rue, J. Leitão, and T. A. DeRouen, "Survival and reasons for failure of amalgam versus composite posterior restorations placed in a randomized clinical trial," J. Am. Dent. Assoc. **138**(6), 775–783 (2007).
3. R. G. Oliver, "The effect of different methods of bracket removal on the amount of residual adhesive," Am. J. Orthod. Dentofacial Orthop. **93**(3), 196–200 (1988).
4. Y. H. Hong and K. K. Lew, "Quantitative and qualitative assessment of enamel surface following five composite removal methods after bracket debonding," Eur. J. Orthod. **17**(2), 121–128 (1995).
5. R. F. Lizarelli, L. T. Moriyama, and V. S. Bagnato, "Ablation of composite resins using Er:YAG laser--comparison with enamel and dentin," Lasers Surg. Med. **33**(2), 132–139 (2003).
6. H. Mimura, T. Deguchi, A. Obata, T. Yamagishi, and M. Ito, "Comparison of different bonding materials for laser debonding," Am. J. Orthod. Dentofacial Orthop. **108**(3), 267–273 (1995).
7. K. Strobl, T. L. Bahns, L. Willham, S. E. Bishara, and W. C. Stwalley, "Laser-aided debonding of orthodontic ceramic brackets," Am. J. Orthod. Dentofacial Orthop. **101**(2), 152–158 (1992).
8. T. Dostálová, H. Jelinkova, J. Sulc, P. Koranda, M. Nemec, J. Racek, and M. Miyagi, "Laser radiation debonding," Proc. SPIE **6843**, 684304 (2008).

Biomedical Optics EXPRESS

9. M. O. Oztoprak, D. Nalbantgil, A. S. Erdem, M. Tozlu, and T. Arun, "Debonding of ceramic brackets by a new scanning laser method," Am. J. Orthod. Dentofacial Orthop. **138**(2), 195–200 (2010).
10. C. K. Morford, N. C. Buu, B. M. Rechmann, F. C. Finzen, A. B. Sharma, and P. Rechmann, "Er:YAG laser debonding of porcelain veneers," Lasers Surg. Med. **43**(10), 965–974 (2011).
11. M. O. Oztoprak, M. Tozlu, U. Iseri, F. Ulkur, and T. Arun, "Effects of different application durations of scanning laser method on debonding strength of laminate veneers," Lasers Med. Sci. **27**(4), 713–716 (2012).
12. P. Rechmann, N. C. Buu, B. M. Rechmann, C. Q. Le, F. C. Finzen, and J. D. Featherstone, "Laser all-ceramic crown removal-a laboratory proof-of-principle study-phase 1 material characteristics," Lasers Surg. Med. **46**(8), 628–635 (2014).
13. T. Dumore and D. Fried, "Selective ablation of orthodontic composite by using sub-microsecond IR laser pulses with optical feedback," Lasers Surg. Med. **27**(2), 103–110 (2000).
14. K. H. Chan, K. Hirasuna, and D. Fried, "Rapid and selective removal of composite from tooth surfaces with a 9.3 µm CO2 laser using spectral feedback," Lasers Surg. Med. **43**(8), 824–832 (2011).
15. R. Alexander, J. Xie, and D. Fried, "Selective removal of residual composite from dental enamel surfaces using the third harmonic of a Q-switched Nd:YAG laser," Lasers Surg. Med. **30**(3), 240–245 (2002).
16. T. M. Louie, R. S. Jones, A. V. Sarma, and D. Fried, "Selective removal of composite sealants with near-ultraviolet laser pulses of nanosecond duration," J. Biomed. Opt. **10**(1), 014001 (2005).
17. C. R. Wheeler, D. Fried, J. D. Featherstone, L. G. Watanabe, and C. Q. Le, "Irradiation of dental enamel with Q-switched λ = 355-nm laser pulses: surface morphology, fluoride adsorption, and adhesion to composite resin," Lasers Surg. Med. **32**(4), 310–317 (2003).
18. J. S. Nelson, L. Yow, L. H. Liaw, L. Macleay, R. B. Zavar, A. Orenstein, W. H. Wright, J. J. Andrews, and M. W. Berns, "Ablation of bone and methacrylate by a prototype mid-infrared erbium:YAG laser," Lasers Surg. Med. **8**(5), 494–500 (1988).
19. U. Keller and R. Hibst, "Effects of Er:YAG laser on enamel bonding of composite materials," Proc SPIE **1880**, 163–165 (1993).
20. S. Yassaei, H. Aghili, and N. Joshan, "Effects of removing adhesive from tooth surfaces by Er:YAG laser and a composite bur on enamel surface roughnessand pulp chamber temperature," Dent Res J. **12**(3), 254–259 (2015).
21. H. C. Almeida, M. Vedovello Filho, S. A. S. Vedovello, A. A. A. Young, and G. O. Ramirez-Yañez, "ER: YAG laser for composite removal after bracket debonding: a qualitative SEM analysis," Int. J. Orthod. Milwaukee **20**(1), 9–13 (2009).
22. K. Stock, R. Diebolder, F. Hausladen, and R. Hibst, "Efficient bone cutting with the novel diode pumped Er:YAG laser system: in vitro investigation and optimization of the treatment parameters," Proc. SPIE **8926**, 1–6 (2014).
23. K. Stock, R. Diebolder, F. Hausladen, H. Wurm, S. Lorenz, and R. Hibst, "Primary investigations on the potential of a novel diode pumped Er:YAG laser system for bone surgery," Proc. SPIE **8565**, 1–8 (2013).
24. K. Stock, F. Hausladen, and R. Hibst, ""Investigations on the potential of a novel diode pumped Er:YAG laser system for dental applications," Proc. SPIE **8208**, 82080D (2012).
25. W. A. Fried, K. H. Chan, C. L. Darling, and D. Fried, "Selective removal of dental composite with a diode-pumped Er:YAG laser," Proc. SPIE **9692**, 1–7 (2016).
26. J. Jew, K. H. Chan, C. L. Darling, and D. Fried, "Selective removal of natural caries lesions from dentin and tooth occlusal surfaces using a diode-pumped Er:YAG laser," Proc SPIE **10044**, 1–5 (2017).
27. R. Yan, K. H. Chan, H. Tom, J. C. Simon, C. L. Darling, and D. Fried, "Selective removal of dental caries with a diode-pumped Er:YAG laser," Proc SPIE **9306**, O1–O8 (2015).
28. A. Dela Rosa, A. V. Sarma, C. Q. Le, R. S. Jones, and D. Fried, "Peripheral thermal and mechanical damage to dentin with microsecond and sub-microsecond 9.6 microm, 2.79 microm, and 0.355 microm laser pulses," Lasers Surg. Med. **35**(3), 214–228 (2004).
29. H. Jelínková, T. Dostalova, M. Nemec, P. Koranda, M. Miyagi, K. Iwai, Y. Shi, and Y. Matsuura, "Free-running and Q-switched Er: YAG laser dental cavity and composite resin restoration," Laser Phys. Lett. **4**(11), 835–839 (2007).
30. D. Fried, "Dentistry: Diagnostics and Spectroscopy," in *Handbook of Biophotonics Vol 2: Photonics for Health Care* (Wiley, 2012), Chap. 68.
31. D. Fried, R. Shori, and C. Duhn, "Backspallation due to ablative recoil generated during Q-switched Er:YAG abaltion of dental enamel," Proc. SPIE **3248**, 78–85 (1998).
32. N. R. Lamantia, H. Tom, K. H. Chan, J. C. Simon, C. L. Darling, and D. Fried, "High contrast optical imaging methods for image guided laser ablation of dental caries lesions," Proc SPIE Int Soc Opt Eng **8929**, 1–7 (2014).
33. G. B. Altshuler, A. V. Belikov, and Y. A. Sinelnik, "A laser-abrasive method for the cutting of enamel and dentin," Lasers Surg. Med. **28**(5), 435–444 (2001).