Suppl Fig 4

A

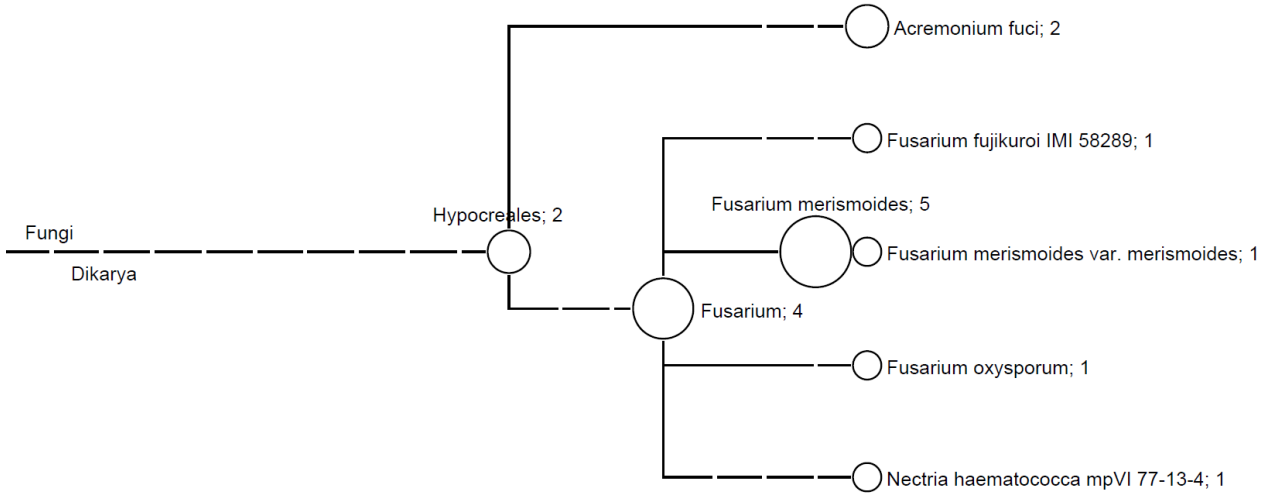
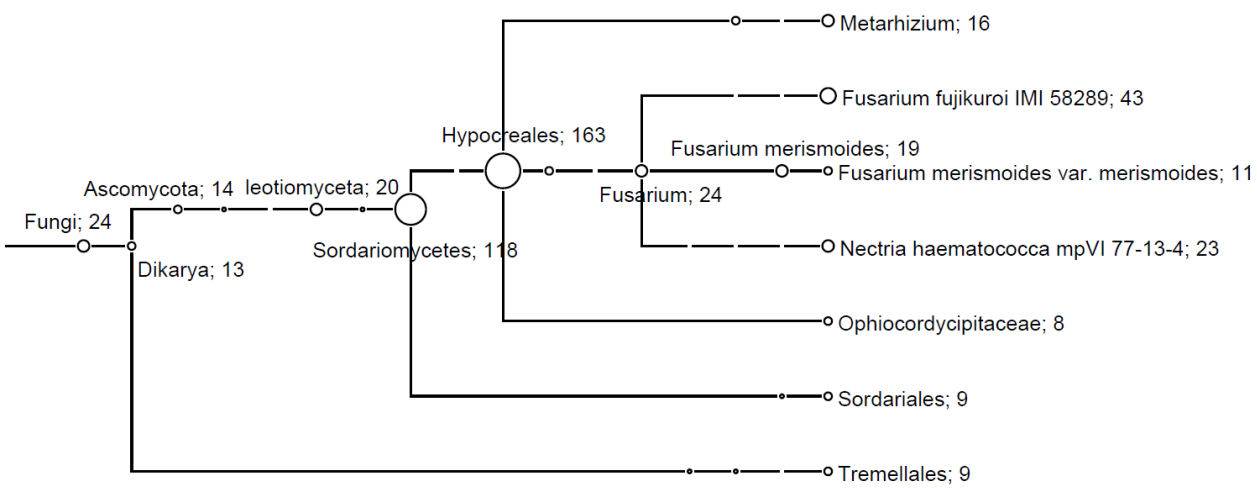
B