A new formalism for temporal modeling in medical decision-support systems

Constantin F. Aliferis, M.D., M.Sc., and Gregory F. Cooper, M.D., Ph.D.
Section of Medical Informatics & Intelligent Systems Program
University of Pittsburgh, Pittsburgh PA

ABSTRACT

We present a new mathematical formalism, which we call modifiable temporal belief networks (MTBNs) that extends the concept of an ordinary belief network (BN) to incorporate a dynamic causal structure and explicit temporal semantics. An important feature of MTBNs is that they allow portions of the model to be abstract and portions of it to be temporally explicit. We show how this property can lead to substantial knowledge acquisition and computational complexity savings. In addition to temporal modeling, the language of MTBNs can be an important analytical tool, as well as temporal language for causal discovery.

INTRODUCTION

Representing and reasoning about temporal concepts is an essential part of medical problem solving. All **five main medical tasks** (prevention, diagnosis, therapeutic planning/intervention, prognosis, and medical discovery) involve time modeling and inference [1].

A great number of medical decision-support systems (MDSSs) have been developed throughout the years, but few of them have incorporated explicitly temporal aspects of their respective domains [2,3]. In general, modeling time is considered to be *one of the greatest challenges in developing MDSSs*. We believe that a major reason for this perceived difficulty is the lack of models for temporal reasoning that simultaneously: (a) are of *sufficiently general applicability*, and (b) *can help developers deal with pragmatic constraints* such as knowledge availability, computational tractability and ease of development.

Accepting this premise means that the "time problem" in MDSSs *must be attacked at the model level first*. In other words, we need to develop methods that support the creation of **efficient, flexible and expressive** temporal medical reasoning systems. In this paper we present a formalism (and summarize the associated theory, algorithms and programs) that can serve as a basis for the conceptual modeling and practical implementation of time in MDSSs. Our formalism (which we call *modifiable temporal belief networks* - MTBNs) can also be used as an analytic tool and a machine-learning model language.

1. MEDICAL TIME-MODELING DESIDERATA

We have developed a number of requirements for an idealized temporal representation and reasoning architecture for MDSSs, based on the body of work in theoretical artificial intelligence dealing with general temporal reasoning [4,5], the literature about systems (and respective problem domains) developed over the years in medical informatics [1,6], and the analysis of a large-scale MDSS's temporal concepts and the analysis of a number of real-life patients medical records [3]. We propose that an idealized temporal representation and reasoning MDSS architecture should provide:

I. Expressive temporal representation (rich ontologies, handling of uncertainty, ability to be integrated with other formalisms, modeling of causality).

II. Effective temporal reasoning (soundness / completeness and computational tractability).

III. Flexible and efficient modeling (availability of knowledge for model specification, extensibility / shareability-reusability, model specification ease).

IV. Formal foundation.

A much more detailed exposition of the desiderata can be found in [6]. In the following section we introduce a formalism designed specifically to meet the above requirements.

2. MODIFIABLE TEMPORAL BELIEF NETWORKS

2.1. Intuitive description of belief networks

We chose to base our formalism on a probability-based scheme because probabilistic formalisms can handle uncertainty and decision-theoretic reasoning, while they are not hindered by the undecidability of first-order-logics [6]. The current state-of-the-art formalism for probabilistic reasoning is the belief-network model (BN) [7]. BNs are mathematical models combining a graphical representation of probabilistic dependencies and independences among random variables (in the form of a directed acyclic graph - DAG), with a set of conditional probability distributions (*cpd*). A BN implicitly captures a joint probability distribution (*jpd*) over the variables. BNs have been used to perform temporal representation and reasoning (TRR) tasks based on the following basic scheme: the structure of a BN is replicated n times, each corresponding to one of n discrete time points (i.e., they have a *temporal range* of n time points). Arcs within a time slice (i.e., one structure copy) are considered to be *instantaneous*, while arcs between time slices are time-lagged (i.e., delayed). We will call a BN used in this manner a **temporal BN (TBN)** [8,9]. Figure 1b presents a TBN corresponding to a three-fold replication of the BN in Figure 1a. The basic BN structure that gets replicated

0195-4210/95/$5.00 © 1995 AMIA, Inc.

involves variables *A, B* and the arc between them. Arc *A1* to *B1* in Figure 1b is considered instantaneous, while arc *A1* to *B2* is time-lagged.

2.2.1. Problems arising when BNs are used for time modeling

Unfortunately TBNs present the following problems: **(a) Cumbersome model specification and presentation.** Hundreds or even thousands of nodes and conditional probability distributions may have to be defined one by one, even if they are the same or vary systematically.

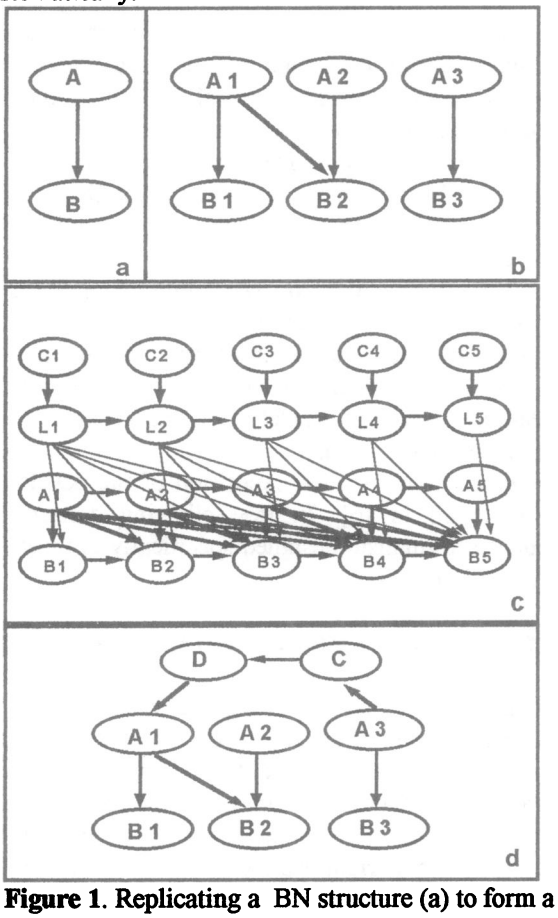

Figure 1. Replicating a BN structure (a) to form a TBN (b), and problems arising with TBNs (c-d).

(b) Predefined temporal range of interest. Ideally we would like to vary the temporal range as a model parameter. TBNs do not allow us to do so.

(c) The processes modeled are either static or evolving over time in a way that is implicit. That is, the causal processes' temporal evolution is *"buried"* in the oftentimes subtle differences between slices, *or even worse, in the conditional probability distributions* associated with the graph's variables. For example in figure 1c, it is not at all clear how the causal structure evolves.

(d) Non-integrated temporal/causal semantics. Typically (in their general form) TBNs are used with standard BN inference algorithms [9]. *Thus knowledge about time can not be exploited easily to prevent serious inconsistencIes from happening, or to enhance the reasoning efficiency.* This problem is most serious in cases where: (i) a *dynamic* causal structure is modeled and (ii) a model contains both temporally indexed and abstracted variables (see Sections 2.2.2 and 2.5. for a discussion of the interpretation and significance of such variables). An example of such problems follows: in Figure 1d, variables *C, D* **are not temporally indexed** (i.e., they are abstract), while variables *A1* to *An* are indexed (i.e., time tagged). Although the graph does not violate the requirement for a DAG, it does violate the trivial requirement for causal precedence of the cause relative to the effect (an obvious inconsistency in this example is that D should come after C (because it is causally influenced by C), but also before C, since D precedes (A1 and thus) A3, which is a cause of C.

2.2.2. MTBN solutions to TBN problems

MTBNs address the problems with TBNs as follows:

(a) The MTBN models have **two forms: a condensed (specification) and a deployed (run-time) form.** The condensed form allows *a concise description of the domain* while the deployed form is the network produced after the structure replication process is carried out.

(b) The **temporal range can be dynamically modified**, as long as the condensed model has been specified.

(c) The most radical departure of MTBNs from TBNs is the **ability to model explicitly how the generating (i.e., causal process) structure evolves with time.** This is achieved via the introduction of two new types of variables: **causal mechanism (arc) variables** and associated **time-lag variables**. Interactions of these variables with ordinary domain variables is allowed in order to describe complex ways in which diseases and other processes evolve over time. Variables can also have arcs to themselves to model *persistence over time*.

(d) **MTBNs utilize a well-specified model of time**, and associate with it all variables in a clear and unambiguous manner. Temporal and causal semantics are well-defined and integrated to the formalism. Both temporally indexed variables and **non-indexed variables are allowed**. Non-indexed variables correspond to variables that are *abstractions over indexed variables*, *variables that we do not know or wish to model their exact temporal location*, or finally *external models* (utilized as "procedural calls" from within the MTBN model). Model specification and inference takes into account this temporal semantics. The **causal semantics** described in [10] are also obeyed. In this paper we discuss single-granularity (i.e., smallest temporal duration) MTBNs only. The formal specification of MTBNs can be found in [11].

Figure 2 shows an example of a MTBN involving variables *A* and *B*. The condensed form is presented on the left part of Figure 2, while the deployed form is on the right. The two variables are causing each other (in a simple feedback loop). The numbers in the squares adjacent to arcs denote time lags.

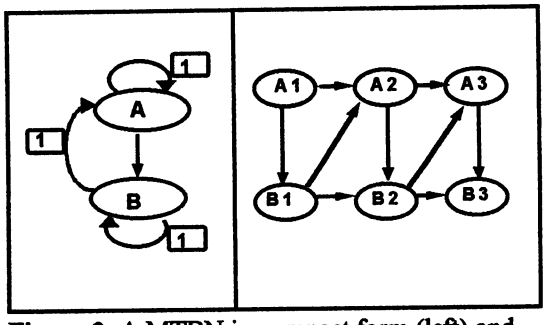

Figure 2. A MTBN in compact form (left) and deployed form (right).

Figure 3 shows the MTBN corresponding to Figure 1c. Contrary to the TBN of Figure 1c, the MTBN representation makes clear that *A* causes *B* and that this causal effect is delayed by *L* time units and that the value of *time-lag variable L* is determined by the values of *C*.

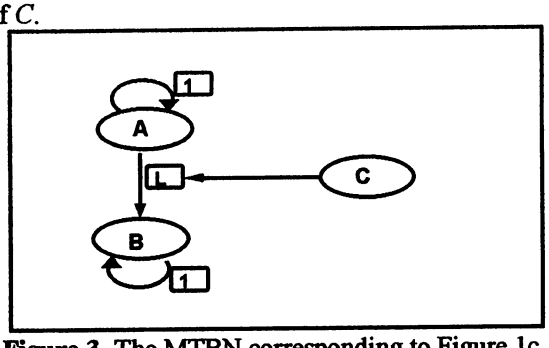

Figure 3. The MTBN corresponding to Figure 1c.

2.3. Properties of MTBNs

The following main properties hold for MTBNs [11]:

Proposition 2.3.1. MTBNs can be factored according to the conditional probability distributions of each variable's X_i values dependent on its active parents' values. *Result 2.3.1. makes it possible to retrieve the jpd from the cpds.*

Proposition 2.3.2. An arbitrary MTBN M1 can be converted to a standard BN B1 such that B1 captures the same joint probability distribution as M1. Thus *any MTBN can be implemented as a BN alternatively.* We will explore the resulting trade-offs in more detail in Sections 2.4 and 2.5.

Corollary 2.3.3. Valid MTBNs are defined from just a temporal graph, temporal range and the conditional probability specifications (i.e., we do not have to explicitly define the full jpd).

Corollary 2.3.4. For every joint probability distribution, there exists a MTBN that captures it.

Corollary 2.3.5. Inference with MTBNs can be carried out with any standard BN inference algorithm and is NP-hard. This result *allows us to use any standard BN algorithm to do inference with MTBNs.* It also suggests that in *the worst case the computational time complexity of MTBNs is intractable.* In Section 2.5 we will show how to use partial abstractions to cope with this problem.

Proposition 2.3.6. MTBNs are more expressive than causal BNs. This results follows since MTBNs can express graphically more *precise* dependences.

Proposition 2.3.7. In some instances, MTBNs can be more efficient than BNs, by exploiting knowledge about the causal process they model.

2.4. Inference with MTBNs

As mentioned in Section 2.3., we can carry out inference with MTBNs by converting them to a BN and using any BN inference algorithm. This approach has advantages and drawbacks. Some of the existing BN inference algorithms are fast and convenient from the developers' standpoint. They do not however help us with the problems outlined in Section 2.2.1. For this reason we have developed a stochastic simulation inference algorithm that is a variation on the logic sampling algorithm (LS) which we call **temporal LS (LST)**. We have implemented LST in a program called HARMONY. This program supports a number of features including temporally explicit and abstracted variables *in the same model* (see Sections 2.2.2, and 2.5), *case simulation* from any MTBN model, and continuous variables. Arbitrary code can implement the cpds, allowing *external models to be integrated with a MTBN.* HARMONY allows us to specify as part of a query the *causal manipulations* of variables (if any). Finally, LST and HARMONY perform simulation only *on a per temporal slice basis.* This allows LST to perform inference with very big models using limited amounts of memory.

2.5.Using partial abstractions to satisfy practical modeling constraints

In this section we show how MTBNs can be a flexible, expressive and efficient formalism for creating MDSS models with well-defined temporal aspects. We use an example from the domain of endocrinology to create multiple MTBN and TBN models. We implemented models both as MTBNs and TBNs. We performed inference using HARMONY (for MTBNs), and LS, as well as the *recursive decomposition exact algorithm* (for the TBNs). We compare the 8 models against each other along the following dimensions: **Computational tractability** (measured by the number of variables in the model), **query completeness** (measured by the number of joint probabilities of all involved variables that can be derived from each model), **model expressiveness and temporal semantic clarity** (assessed qualitatively as satisfactory or not), availability of knowledge necessary to instantiate the model (assessed qualitatively), **specification ease** (measured by the number of required conditional distributions), and **model behavior specification ease** (ease of specifying the high-level model behavior from the low-level causal mechanisms - assessed qualitatively). For all qualitative assessments we provide justifications in the descriptions of the models.

Table 1 summarizes these properties for all 8 different models. Our models capture some basic regulatory features of thyroid function. The production of the main thyroid hormone, T4, is stimulated by the

Table 1. Comparison of time modeling properties of 8 alternative models for the TRH stimulation example. The first three columns summarize quantitatively assessed properties, while the last three columns summarize qualitatively assessed properties (for explanations see text). Calculations omit variables with constant values.

MODEL	COMPLEXITY (NUMBER OF VARIABLES)		QUERY COMPLETENESS (NUMBER OF JOINT PROBABILITIES)		SPECIFICATION EASE (NUMBER OF CONDITIONAL PROBABILITY DISTRIBUTIONS)		MODEL EXPRESSIVENESS & TEMPORAL SEMANTIC CLARITY		AVAILABILITY OF REQUIRED KNOWLEDGE		MODEL BEHAVIOR SPECIFICATION EASE	
	MTBN	TBN	MTBN	TBN	MTBN	TBN	MTBN	TBN	MTBN	TBN	MTBN	TBN
FULLY EXPLICIT	$11*10^6$	$11*10^6$	$\sim(3e+10^{84})$	$\sim(3e+10^{84})$	7	$77*10^6$	+	-	-	-	-	-
FULLY IMPLICIT	3	3	20	20	3	3	+	+	+	+	+	+
HYBRID 1	22	22	$10*36^5$	$10*36^5$	6	22	+	-	±	±	±	±
HYBRID 2	10	10	$19.4*10^3$	$19.4*10^3$	6	10	+	-	±	±	+	+

pituitary hormone TSH. TSH production is suppressed by high levels of T4, and stimulated by TRH. A functional thyroid adenoma (FTA) is a benign tumor that produces T4 independently of the rest of the thyroid tissue. This in effect disrupts the feedback loop between TSH and T4, resulting in high concentrations of T4 and low TSH. A particular cause for thyroid adenoma is exposure to X-radiation. The abnormality in the T4 regulation can be detected by a TRH stimulation test that involves measuring TSH levels over a period of time after administering TRH to the patient. In a normal person the observed pattern is bell-shaped, while in the presence of FTA, it is flat and closer to 0 [12]. Ideally we would like to ask questions of the type "*In the context of a TRH stimulation test,* and given that *the values of TSH at times 1 to n are known, what is the probability of a FTA in this patient?*".

A first approach towards modeling this problem is shown in MTBN form in Figure 4.

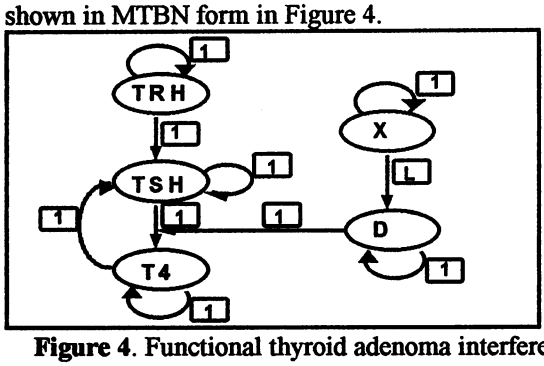

Figure 4. Functional thyroid adenoma interferes with TSH-T4 loop (*fully explicit*).

Here we model all variables as temporally explicit (i.e., indexed). The problem is that the temporal granularities of interest for different variables are *vastly different.* For instance the TSH and T4 interaction is on the order of seconds or minutes, while X radiation (X) and FTA (D) are on the order of months or years. To incorporate X and D into our model we have to convert them to the smallest granularity of interest (i.e., minutes) which leads to an computationally unmanageable model for both the MTBN and TBN models (table 1, row 1). Also we note that it is easy to specify such a model in MTBN form but the available knowledge does not support such a specification. Finally, the number of questions given observed evidence in both models is astronomical, but *most of them are of no clinical interest.* All calculations about this model in table 1 assume a time lag between X and D that takes values between 1 and 10 years.

Another approach, shown in Figure 5, involves abstracting X and D, and replacing variables TRH, TSH, and T4 by an abstraction variable TRH STIMULATION RESPONSE PATTERN (taking as values: normal, abnormal).

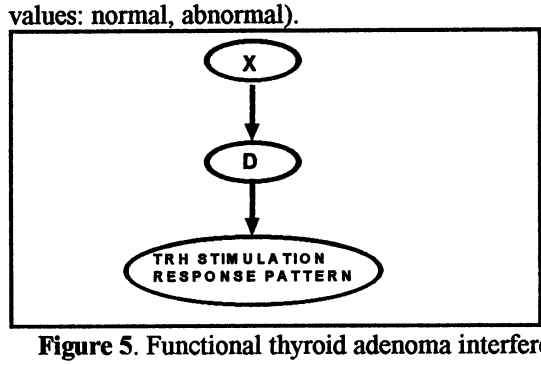

Figure 5. Functional thyroid adenoma interferes with TSH-T4 loop (*fully implicit*).

This is the method used in most current MDSSs (**implicit time modeling** [3]). This approach yields easily specified models for both formalisms, and it is computationally tractable. Unfortunately two problems remain: first these models can answer a very restricted number of queries of interest, and second the evidence and questions comprising these queries are temporally implicit. Therefore, in a patient case someone must **abstract** over the values of TSH and **map** the abstraction to one of the values of the TRH STIMULATION RESPONSE variable.

Both of these difficulties are addressed when we model this problem using the **hybrid1 model**, which is a combination of temporally explicit (indexed) and abstracted variables (Figure 6). In particular, we model TSH, TRH, T4 as explicit variables so that we can observe their temporal patterns and reason about them,

while we are "collapsing" D to the present time and X to involve a small number of past periods, each spanning years.

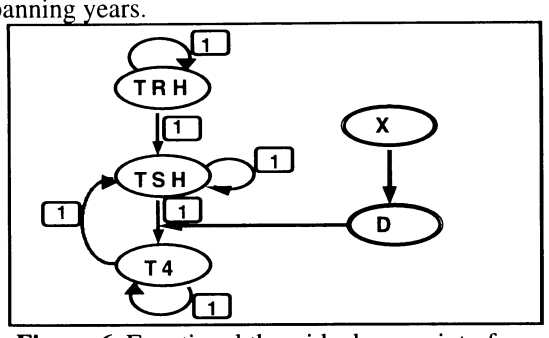

Figure 6. Functional thyroid adenoma interferes with TSH-T4 loop (*hybrid1 model*).

The models are tractable and easy to specify. The range of TSH, TRH, and T4 is constrained to the duration of a TRH stimulation test (~30 minutes). Unfortunately, for many domains it is questionable whether we could have access to accurate conditional probability distributions for such a model. An equally serious problem is specifying the probabilities so that the high level behavior of the model is consistent with known empirical patterns of TSH given TRH manipulations (because it requires *repeated tuning* of the model so that the correct system behavior emerges from the specification of *low-level local variable interactions*).

Assuming that the difficulties associated with the type of hybrid model described in the previous paragraph can not be overcome, MTBNs give us the flexibility to change our modeling approach and build the model of Figure 7 (**hybrid2 model**).

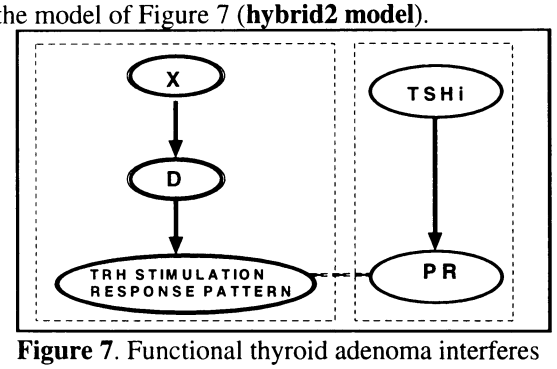

Figure 7. Functional thyroid adenoma interferes with TSH-T4 loop (*hybrid2 model*).

This model instead of involving TSH, TRH, and T4, involves only TSH measurements after TRH stimulation. The model consists of two parts: an abstracted reasoning part (on the left) essentially identical to the one of Figure 5, and an explicit one, (on the right) corresponding to an abstraction function PR over values of TSH_i (i.e., TSH at time I). The output of PR is assigned to (i.e., determines) the value of the "TRH STIMULATION RESPONSE PATTERN" variable. For details on integrating external models to MTBNs see [6].

DISCUSSION

In addition to the modeling services offered by MTBNs that were presented in sections 2.2. to 2.5, MTBNs also allow us to reason spatio-temporally, and to build temporal entities such as facts /events /intervals and reason with them , or reference them in multiple ways [6]. Unique features of MTBNs that can not be found in temporal variants of BNs such as TBNs, and *action networks* [6], include lag and arc variables, integration of explicit /implicit time modeling, and a more concise representation. In [13] we also explore the use of MTBNs to study temporal abstractions and temporal causal discovery methods. Our current work is focused on: (a) extensions to MTBNs to handle simultaneously multiple-granularity models, and (b) applying and evaluating the methods presented here.

ACKNOWLEDGEMENTS

We thank Prof. B. Buchanan, Prof. M. Pollack, Dr. R. Ambrosino, Dr. M. Wagner, Dr. Bonnie Joe, and Ed Lomax, for providing useful feedback on the ideas of this study. This work was supported by grant BES-9315428 from the National Science Foundation and by grant LM05291-02 from the National Library of Medicine.

References

(1) Kahn MG "Modeling time in medical decision support programs" Med Decis Making 1991;11:249-264.
(2) Miller RA "Medical Diagnostic Decision Support Systems - Past, Present, and Future" J Am Med Informatics Assoc. 1994;1:8-27.
(3) Aliferis CF, Cooper GF, Bankowitz R,"A temporal analysis of QMR" 11th Annual SCAMC, 1994; 709-715.
(4) Shoham Y "Temporal logics in AI: Semantical and ontological considerations " Artificial Intelligence 1987;33: 89-104.
(5) Allen JG "Towards a general theory of actions and time" Artificial Intelligence 1984;23:123-154.
(6) Aliferis CF, Cooper GF "Modifiable temporal belief networks: Rationalle and modeling techniques" Technical report SMI-95-01, University of Pittsburgh.
(7) Neapolitan RE "Probabilistic reasoning in expert systems" John Wiley and Sons, New York 1990.
(8) Dagum P, Shachter R, Fagan L "Modeling time in belief networks" Technical report STAN-KSL-91-49, Stanford University.
(9) Provan G "Tradeoffs in constructing and valuating temporal influence diagrams" Proceedings of Uncertainty in AI 1993; 40-47.
(10) Drudzel M, Simon H "Causality in Bayesian belief networks" Proceedings of Uncertainty in AI. 1993; 3-11.
(11) Aliferis CF, Cooper GF "Modifiable temporal belief networks: Theoretical properties" Technical report SMI-TR-95-08, University of Pittsburgh.
(12) Wyngaarden JB, Smith LH "Cecil Textbook of medicine" W.B.Saunders Co., Philadelphia, 1988.
(13) Aliferis CF, Cooper GF "A formalism for time modeling, analysis, and discovery" Technical report SMI-95-11, University of Pittsburgh.