JOURNAL OF THE EXPERIMENTAL ANALYSIS OF BEHAVIOR 2000, **74,** 127–146 NUMBER 1 (JULY)

EQUIVALENCE RELATIONS AND THE REINFORCEMENT CONTINGENCY

MURRAY SIDMAN

NEW ENGLAND CENTER FOR CHILDREN

Where do equivalence relations come from? One possible answer is that they arise directly from the reinforcement contingency. That is to say, a reinforcement contingency produces two types of outcome: (a) 2-, 3-, 4-, 5-, or *n*-term units of analysis that are known, respectively, as operant reinforcement, simple discrimination, conditional discrimination, second-order conditional discrimination, and so on; and (b) equivalence relations that consist of ordered pairs of all positive elements that participate in the contingency. This conception of the origin of equivalence relations leads to a number of new and verifiable ways of conceptualizing equivalence relations and, more generally, the stimulus control of operant behavior. The theory is also capable of experimental disproof.

Key words: stimulus control, equivalence relations, conditional discrimination, matching to sample, simple discrimination, theory of equivalence relations

Given the theoretical controversies that the phenomena of equivalence relations have generated, one might have expected crucial experiments to have been forthcoming. This does not seem to have happened. The theories have been criticized as being basically indistinguishable on empirical grounds. For example, Clayton and Hayes (1999) stated, "All three of the main theories are adaptable to any outcome, thus making any empirical evidence to the contrary unlikely. . . . Each of the theories is a specific way of speaking, and as such, is easily mapped onto generic occurrences of any type" (p. 158). It is, therefore, time for the proponents of the major theories of equivalence relations to "put their money where their mouth is." Here, I am going to elaborate on the theory that I have presented elsewhere (Sidman, 1994), integrating critical features more concisely and coherently, adding a few new considerations, and describing some of the many experiments that remain to be done. I find a number of those experiments attractive not just because they are crucial to theory but because they promise to uncover behavioral phenomena that we have not seen before in the laboratory.

By emphasizing testable predictions instead of discussing the more usual philosophical and logical differences among the major theories, perhaps I can shift the theater of controversy to empirical grounds. I believe that a more comprehensive discussion of the theories in the present context would distract from, rather than illuminate, my main theses. For more extensive discussion of the theoretical controversies, not directly based on data, see Sidman (1994, pp. 113–114, 165–175, 305–307, 509–511, 553–561; 1997a, 1997b).

THE THEORY

In the area of equivalence relations, the big theoretical sticking point these days centers on the question, "Where do equivalence relations come from?" (Sidman, 1990). Two problems seem to have hindered full discussion of my answer to this question: First, although I have been quite specific about where I think they come from, I have not proposed some new mechanism or process from which to derive equivalence relations. Therefore, other theoreticians apparently feel that I have shirked my responsibilities as a theorist. Second, there has also been considerable confusion between the theory I have put forth to deal with the question of where equivalence relations originate and the descriptive system my colleagues and I have proposed for identifying equivalence relations. I shall elaborate on both of these problems.

Some theorists are perhaps unhappy because my answer to the question of where equivalence relations come from seems prosaic: I have argued simply that equivalence is

This article is adapted from an invited presentation to the American Psychological Association Division 25 on August 20, 1999, in Boston. The New England Center for Children provided helpful support for its preparation.

Reprint requests may be directed to Murray Sidman, New England Center for Children, 33 Turnpike Road, Southborough, Massachusetts 01772-2108.

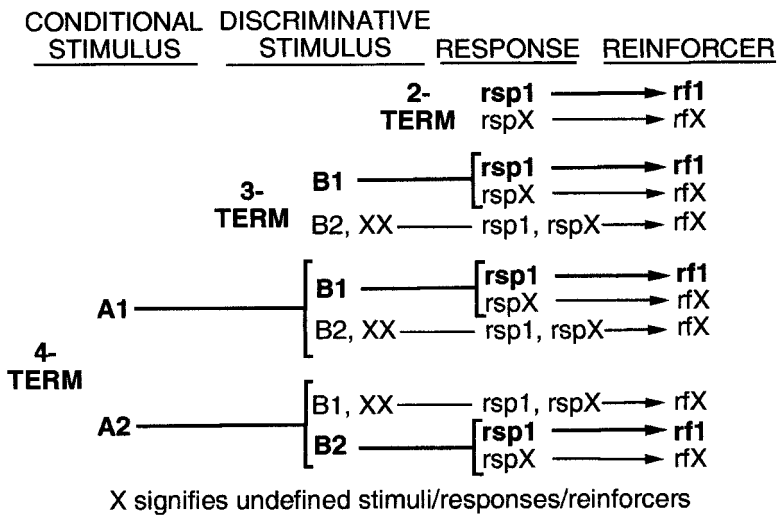

Fig. 1. Two-, three-, and four-term contingencies.

a direct outcome of reinforcement contingencies. In accord with what I have seen happening in the laboratory, I have proposed that the reinforcement contingency generates the equivalence relation.

The notion is that a reinforcement contingency produces at least two types of outcome: analytic units and equivalence relations. Most familiar to us are the units of analysis a contingency may give rise to (Sidman, 1986), as diagrammed in Figure 1. We know the two-term response–reinforcer unit as *operant reinforcement.* A defined response (rsp1) produces a defined reinforcer (rf1); no other response (rspX) does so.

We call the fundamental three-term unit *simple discrimination.* Now, the two-term unit comes under the control of discriminative stimuli. The defined response produces its reinforcer only in the presence of a defined discriminative stimulus (B1); in the presence of other stimuli (B2, XX), no response of any kind produces the defined consequence.

Conditional discrimination is our name for the four-term unit. Here, the three-term unit comes under the control of a conditional stimulus (Cumming & Berryman, 1965). Now, the defined response may produce its reinforcer in the presence of either of two discriminative stimuli (B1 or B2), depending on which conditional stimulus is present (A1 or A2). Analytic units may, of course, have five, six, or more terms—for example, second-order conditional discrimination, and so on. Figure 1 does not show those larger units.

Less familiar than the standard units of analysis is the second type of outcome: The reinforcement contingency also produces equivalence relations. These consist of ordered pairs of all positive elements that participate in the contingency. I shall have more to say about this definition of the equivalence relation; it is not as new as it may seem. For now, let me just note that it is no more than a concise summary of what we see happening when our procedures produce the phenomena we describe as *equivalence relations.*

THE DESCRIPTIVE SYSTEM AND THE THEORY

First, however, I will say a few words about a matter that is really a side issue in the present context, but I would like to keep that issue from obscuring the main thread of the discussion. My concern is that some may confuse the theory that equivalence relations originate in reinforcement contingencies with the system my collaborators and I have proposed for describing the behavioral phenomena of equivalence (Sidman et al., 1982; Sidman & Tailby, 1982). The descriptive system does involve one theoretical assumption, namely, the hypothesis that our behavioral data represent real-world instances of the mathematical abstraction that is termed *equiv-*

alence relation. If that simple assumption is correct—if our observations are real examples of the mathematical abstraction—then mathematical set theory gives what I have argued is a consistent, coherent, productive, and parsimonious way to describe our data (Sidman, 1997b). The point I want to make at present, however, is that the descriptive system is independent of any theory of where equivalence comes from.

Although it is a mathematical concept, then, the equivalence relation turns out to describe behavior that we see happening. Whatever their source, whether it is the reinforcement contingency (e.g., Sidman, 1994) or something more (e.g., Hayes, 1991; Horne & Lowe, 1996), the emergent units turn out to be predictable and describable as examples of the properties that define an equivalence relation. To propose that equivalence originates in the reinforcement contingency, however, is to postulate a new outcome of the contingency, an outcome that does go beyond the establishment of the *n*-term analytic units we have already become familiar with through the work of Skinner (e.g., 1938, 1953) and others. That outcome is the potential for the emergence of new analytic units (Sidman, 1986); for example, the new conditional discriminations that subjects perform in our standard tests for equivalence relations.

CONTINGENCIES

Let us look more closely at the hypothesis that reinforcement contingencies generate equivalence relations. Although no single diagram can illustrate all that goes on in a behavioral episode, Figure 2 can provide at least a reasonable starting point for illustrating what happens in four-term units—in conditional discriminations. The conditional discrimination procedures illustrated in Figure 2 are often called *matching to sample*. We usually call the conditional stimuli *samples* and the discriminative stimuli *comparisons*. One problem here is that the illustrated conditional discriminations entail only two comparison stimuli per trial. The use of only two comparisons is dangerous (Carrigan & Sidman, 1992; Green & Saunders, 1998; Johnson & Sidman, 1993; Sidman, 1987). For example, we cannot tell if the controlling comparison is the one the subject selects or the one the subject rejects. The simplification, however, permits one to use expository diagrams that are simpler and less space consuming.

We can see, first, that given a defined conditional stimulus or sample (e.g., A1), two defined discriminative stimuli become available to the subject (Comparisons B1 and B2). The positive comparison (B1) sets the occasion for the defined response to produce the defined reinforcer; the negative comparison (B2) does not.

By including the Xs, which denote undefined elements, we acknowledge the possibility of uncontrolled variables at each stage of the contingencies. For example, the subject may do other things (rspX) instead of the defined response. The subject's responses may produce undefined consequences (rfX); also, undefined discriminative and conditional stimuli (XX) may control what the subject does.

This diagram illustrates not just sequences of stimuli and responses. It also shows contingencies, events that are true only under certain conditions: "If this, then that; if not this, then not that." For example, in the uppermost conditional discrimination: If the defined sample is A1 (not A2), and if Comparison B1 (not B2 or XX) controls the defined response (rsp1 and not rspX), then and only then will the defined reinforcer be forthcoming; if Comparison B2 controls responding when A1 is the sample, then no response, defined or undefined, will produce the defined reinforcer. And if A2 (not A1) is the sample, then reinforcement becomes subject to a different set of conditions. In equivalence experiments, we often set up similar contingencies to teach a second conditional discrimination. A possibility appears below the first dashed line. Now, the former comparisons, B1 and B2, are samples; new stimuli, C1 and C2, are the comparisons. Finally (below the second dashed line), in the presence only of undefined stimuli (XX)—for example, between trials—no response can produce anything but undefined consequences. (Even during trials, we sometimes say that the subject's attention wanders.)

The bold lettering shows how we often oversimplify diagrams of conditional discriminations. In those abbreviated diagrams, we omit all elements that are denoted here in

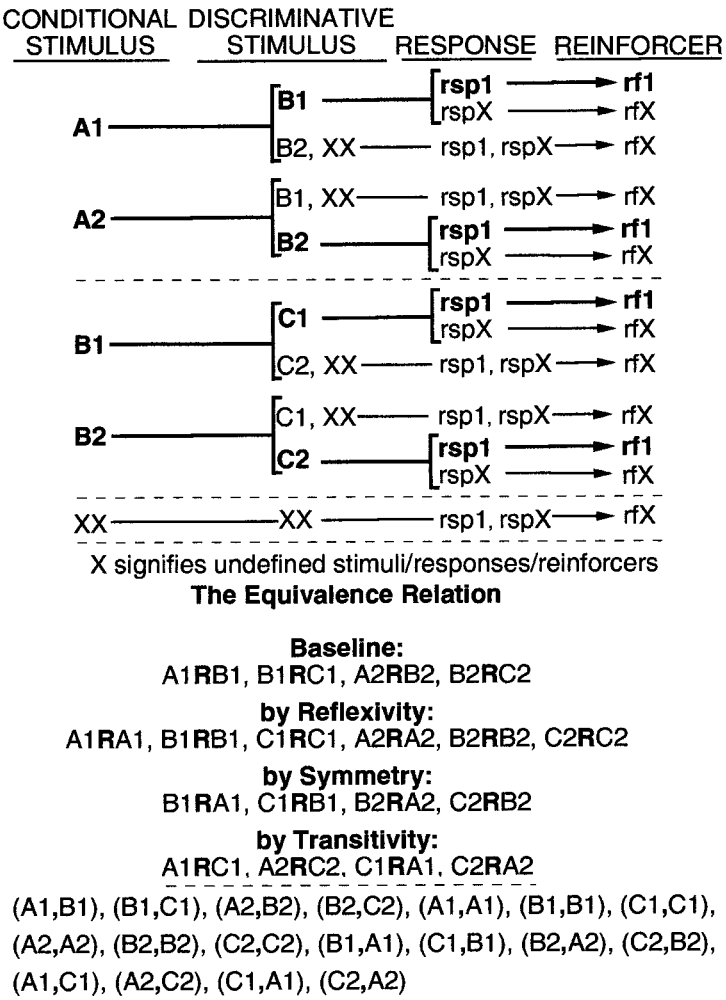

Fig. 2. Four-term contingencies (conditional discriminations) and the ordered stimulus pairs in the resulting equivalence relation.

plain type. Such bare-bones diagrams do not show any contingencies. An unfortunate consequence is that we come to ignore the procedural complexities and talk about "associations," or associated events rather than contingent events. We come to think linearly—about temporal sequences of events—and not about simultaneous options. I shall have more to say about the incomplete understanding that can result when we attribute causation in a behavioral episode solely to temporally sequential events.

Given these conditional discriminations as a baseline, we go on to demonstrate the equivalence relation by showing the emergence of all of the conditional discriminations that exemplify the relation. Those conditional discriminations are summarized below the diagrams. In this notation, the bold upper case **R** denotes an equivalence relation that includes the pair of elements on either side of the **R.** In establishing the baseline conditional discriminations, we explicitly teach a conditional relation between A1 and B1, B1 and C1, A2 and B2, and B2 and C2. If the conditional relations that our baseline procedures establish are elements in set theory's equivalence relation, **R,** then the description of **R** must also include certain emergent conditional discriminations. They are emergent in the sense that we do not explicitly teach them in the baseline.

In accord with the descriptive scheme that set theory provides, these emergent conditional relations are classified as demonstrations of reflexivity, symmetry, and transitivity: *reflexivity*, in which we show that the relation holds between each stimulus and itself (often called identity matching); *symmetry*, in which we show that the relation holds when we reverse the elements of each baseline conditional discrimination—the former baseline samples now serving as comparisons and the former baseline comparisons now serving as samples; and *transitivity*, in which we show the relation holding when we test new conditional discriminations in which samples come from one baseline conditional discrimination and comparisons from the other. Here, I want to emphasize simply that our analytic units, both baseline and emergent, are the outcomes of contingencies that are much more intricate than our usual bare-bones diagrams reveal. Let us see now where these complexities take us.

The diagram shows that the alternative responses and stimuli involved in the contingencies can influence the baseline and the emergent conditional discriminations. For example, we might make Comparison B2, or some undefined stimuli, very similar to B1; or those other stimuli may be more attractive to the subject than B1 is; or some undefined response may be much easier than Response 1 is for the subject; or some undefined consequence may be a more effective reinforcer than what we have defined as the reinforcer. Such possibilities will weaken the AB conditional discrimination and any relation we might expect to be derived from it.

This kind of nonlinear analysis, as Goldiamond (1975, 1982) termed it, can be experimentally fruitful, but I note it here mainly to illustrate how an examination of the contingencies that give rise to equivalence relations leads immediately to meaningful and experimentally answerable questions. Other theories of equivalence fail to consider the possibility that unspecified options in the contingencies may introduce competing sources of control, dismissing that possibility as a methodological issue that is supposedly only tangential to theory. For me, methodology and theory are inseparable.

FOUR-TERM CONTINGENCIES AND EQUIVALENCE

Having briefly noted a few examples of nonlinear contingency analysis, I am going to move on to other considerations. In the lowest section of Figure 2, I have simply listed all the sample and comparison stimulus pairs whose members must turn out to be conditionally related if each baseline contingency has created both a four-term analytic unit and an equivalence relation. Although this list does not classify the stimulus pairs according to particular properties of the equivalence relation, it contains the same related pairs. All of these are needed to fulfill our definition of equivalence. In subsequent figures, I will describe the equivalence relation by listing the baseline and emergent conditional discriminations as event pairs, without designating the particular property of equivalence that each pair helps to define.

Note that the list includes pairs of conditional and discriminative stimuli only: A, B, and C. Yet, I said earlier that the equivalence relation consists of ordered pairs of *all* positive elements that participate in the reinforcement contingency. The uppermost diagrams show two other kinds of elements that also participate in the contingencies and become components of the analytic units. These are the defined reinforcers and responses. Why have I not included Reinforcer 1 and Response 1 in the pairs of elements that make up the equivalence relation? No other theory poses this question. It arises as a theoretical query only if one considers the reinforcement contingency to be the source of equivalence, and the relation to include ordered pairs of all positive elements that participate in the contingency.

It turns out that the equivalence relation does include all elements of the contingency. To demonstrate this, one has to arrange special conditions. In the four-term units diagrammed in Figure 2, Reinforcer 1 and Response 1 are common to all of the units. If pairs of events that included those elements were to remain in the equivalence relation, the contingencies themselves could not work. They could not work because all conditional and discriminative stimuli in all units that the reinforcement contingencies create would be related to the same defined reinforcer and

response. These common elements would bring all stimuli into one large equivalence class. With Stimuli A1, A2, B1, B2, C1, and C2 all becoming equivalent to each other, subjects would fail to demonstrate the conditional or even the simple discriminations this diagram calls for. With all of the stimuli being members of a single class, subjects would, for example, treat the A1B1 and A1B2 pairs as equivalent; would react to B2 and B1 in the same way; and so on.

But we know, of course, that the contingencies do work; subjects do form simple and conditional discriminations even with only a single defined reinforcer and response. Our theory requires us to assume that when the two outcomes of the reinforcement contingency come into conflict, the analytic unit takes precedence over the equivalence relation, as it must if we are to learn to react effectively to the world around us. In order for the common response and reinforcer elements to retain their membership in the analytic unit, they must selectively drop out of the equivalence relation.

Reinforcement contingencies that involve just one reinforcer and one defined response must at first generate one large equivalence class. The demands of the contingencies, however, must cause the response and reinforcer elements to drop out of that class eventually, making it possible for the smaller classes, A1B1C1 and A2B2C2, to form.

Elsewhere, I have outlined experimental tests of the proposition that three- and four-term simple and conditional discrimination procedures generate at first a large equivalence class that contains pairs of all contingency components, and that eventually, the common reinforcer and response elements drop out of the class (Sidman, 1994, pp. 411–414). That research has yet to be carried out. When it is, its results will be crucial to the theory that equivalence arises from reinforcement contingencies.

Nevertheless, even in the absence of direct experimental demonstrations that all elements of the contingency enter into the equivalence relation at least temporarily, our analysis provides other reasons for anticipating a confirmation of that theoretical proposition. For example, it is quite well established now that when the contingencies and equivalence relations do not conflict, the equivalence relation does include ordered pairs of all elements of the analytic unit, including the reinforcer and the response.

THE EQUIVALENCE RELATION AND THE REINFORCER

To test whether the reinforcer remains in the equivalence relation when its presence there does not conflict with establishment of the analytic unit requires only a modest change in the contingencies we have been looking at. The diagrams in Figure 3 are exactly the same as before, except that Reinforcer 2 has replaced Reinforcer 1 in two units: When A1 is the sample, the defined response to Comparison B1 still produces Reinforcer 1, but when A2 is the sample, the defined response to Comparison B2 produces Reinforcer 2. Similarly, in the second conditional discrimination, the conditional B2C2 relation now leads to Reinforcer 2.

The addition of Reinforcer 2 provides differential consequences within each conditional discrimination. Without a common reinforcer to help bring about class union and get in the way of the contingency's establishment of the analytic unit, the reinforcers no longer have to drop out of the equivalence classes. Now, tests in which the reinforcing stimuli are used also as sample and comparison stimuli should reveal new members of the equivalence relation. These are underlined in the list of pairs below the diagrams. Fourteen more related pairs should be added by what has been called performance-specific or class-specific reinforcement, but perhaps should be called contingency-specific reinforcement.

Dube, McIlvane, and their collaborators have confirmed these expectations (Dube & McIlvane, 1995; Dube, McIlvane, Mackay, & Stoddard, 1987; Dube, McIlvane, Maguire, Mackay, & Stoddard, 1989; McIlvane, Dube, Kledaras, de Rose, & Stoddard, 1992). By demonstrating the emergence of many of the expected new related pairs, each including a stimulus that is also a reinforcer, they showed that the reinforcers in the four-term units do join the conditional and discriminative stimuli as members of the equivalence classes. These findings support the notion that equivalence relations, consisting of ordered pairs of all contingently related elements, includ-

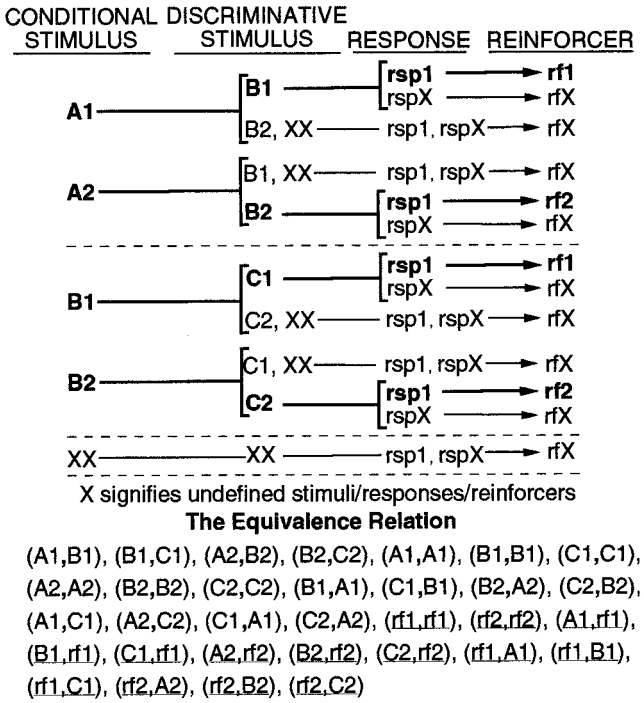

Fig. 3. Four-term contingencies (AB and BC conditional discriminations) with contingency-specific reinforcers (rf1 and rf2). Underlining indicates the event pairs that the use of contingency-specific reinforcers adds to the equivalence relation.

ing the reinforcers, arise directly from the reinforcement contingency. No other major theory of equivalence leads us even to ask whether the reinforcer belongs to the equivalence class.

Let us pursue the inquiry further, with small changes in our contingency diagram. Figure 4 simply introduces new sample and comparison stimuli in the second conditional discrimination. Instead of B1 and B2 as samples (as in Figure 3), we now have D1 and D2, stimuli that appear nowhere else in the baseline contingencies. The comparison stimuli, C1 and C2, also appear nowhere else. With these changes—and, of course, a new subject—what are we to expect in the way of emergent conditional discriminations?

The two conditional discriminations (AB and DC) now have no conditional or discriminative stimuli in common. Nevertheless, the list below the diagram indicates that an equivalence relation is still to be expected. The relation will include the same 32 event pairs that had been included before. For example, the subject will still match Stimulus A1 to C1 and A2 to C2 even though none of those stimuli are now directly related to a common sample or comparison. Furthermore, also included in that relation will be emergent conditionally related pairs (underlined) that include the D stimuli as members.

How is all this supposed to happen? Reinforcer 1 is now a component of two contingencies, one including A1 and B1 and the other including D1 and C1. This common reinforcer element will bring all four of those stimuli along with it into the same class (class union). Similarly, Reinforcer 2 will bring A2, B2, C2, and D2 into another class. The equivalence relation thus comes to include another 18 pairs of elements.

This relatively simple experiment is crucial. With careful procedural management, all of the listed conditional discriminations must emerge from these baselines. If they do not emerge, the theory that equivalence arises directly from the reinforcement contingency becomes untenable. I know of no other theory of equivalence that offers such a clear opportunity for disproof.

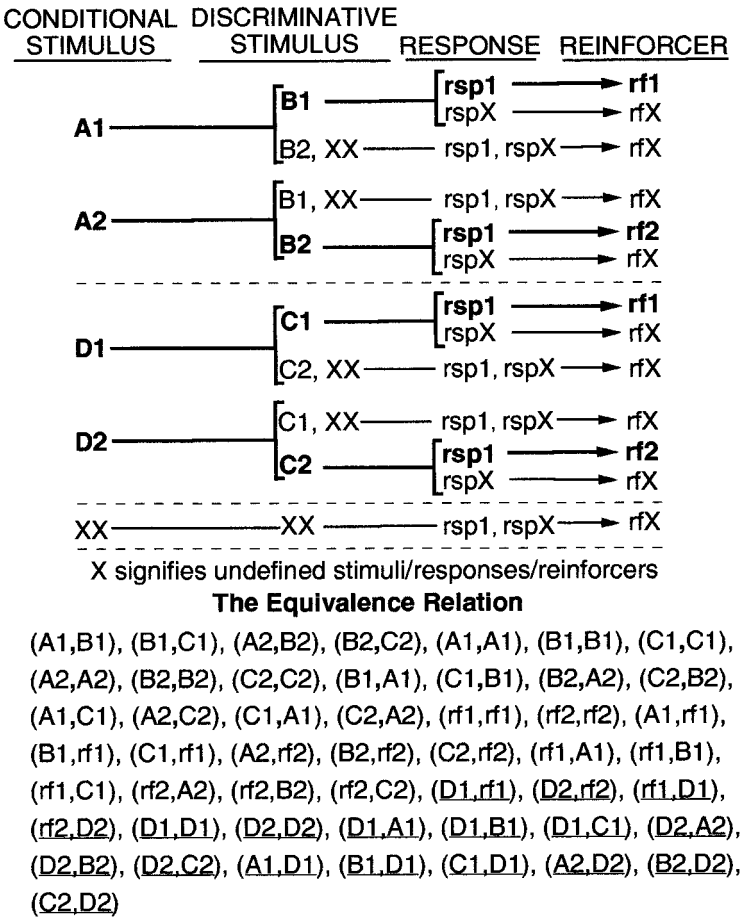

Fig. 4. Four-term contingencies (AB and DC conditional discriminations) with contingency-specific reinforcers (rf1 and rf2). Underlining indicates the event pairs added to the equivalence relation by the substitution of the DC for the former BC conditional discriminations.

Although the experiment has not been done exactly as proposed here, Dube and his collaborators, working with human subjects, have again provided decisive data (Dube & McIlvane, 1995; Dube et al., 1989). They showed that stimuli can become members of the same equivalence class even when they have been related in common to no other event than a reinforcer. Figure 5 illustrates one of their procedures (Dube & McIlvane, 1995). They first established a baseline of identity matching, with contingency-specific reinforcement. In one conditional discrimination (uppermost in Figure 5), when A1 was the sample, the subject's selection of Comparison A1 produced Reinforcer 1; with A2 as the sample, selecting Comparison A2 produced Reinforcer 2. In the other baseline conditional discrimination (below the first dashed line), subjects learned to match B1 to itself and B2 to itself, with Reinforcer 1 following selections of Comparison B1 in the presence of Sample B1, and Reinforcer 2 following selections of Comparison B2 in the presence of Sample B2.

The list of emergent conditional discriminations below the diagram describes the equivalence relation that is to be expected. The subject will match Stimuli A1 to B1, A2 to B2, B1 to A1, and B2 to A2, even though none of those have been directly related to a common sample or comparison. Dube and McIlvane (1995) reported such test results for several of their subjects. The reason to expect these emergent conditional discriminations is that Reinforcer 1, a component of the two

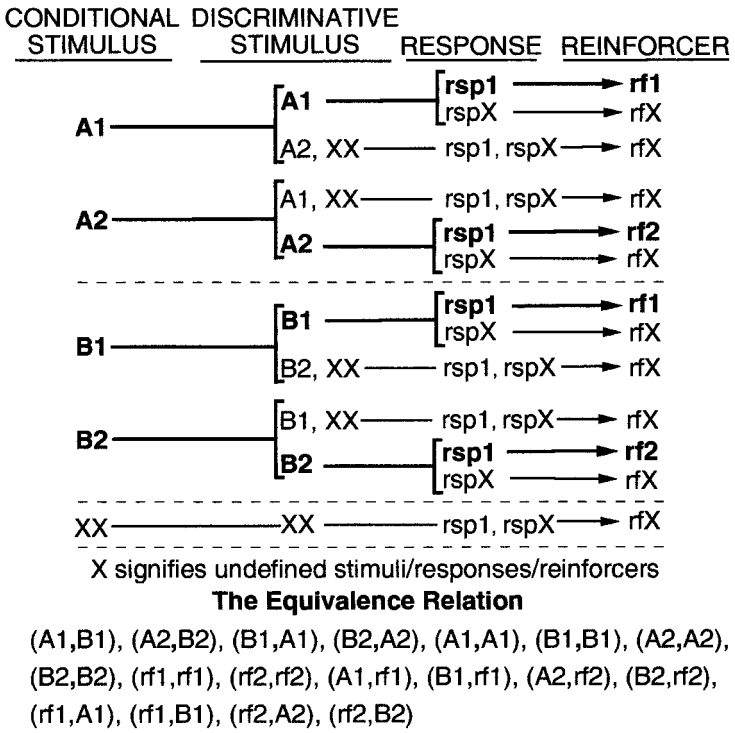

Fig. 5. Four-term contingencies (AA and BB identity matching) with contingency-specific reinforcers (rf1 and rf2), and the ordered event pairs in the resulting equivalence relation (after Dube & McIlvane, 1995).

baseline contingencies that include A1 and B1, brings both of those stimuli along with it into the same class. Similarly, Reinforcer 2, a component of the two contingencies that include A2 and B2, brings both of those stimuli along with it into another class. Like the experiment that was suggested in Figure 4, this one, too, is critical for the theory that equivalence arises directly from the reinforcement contingency and that the equivalence relation will include all of the positive elements of the contingency that do not conflict with the establishment of the analytic unit itself.

Reichmuth (1997), working with sea lions, used yet another experimental procedure to show that stimuli become members of a functional class after having been related only to the same reinforcer as previously established members of the class (see the repeated reversal procedure, below). No other theory that has come to my attention has predicted these findings. If other theorists should now claim such findings to support their theory, they would also be obliged to show that their theoretical derivation is sufficiently rigorous to have required abandonment of their theory in the eventuality of negative results. Theories that can handle both positive and negative results from the same experiment cannot claim support from either.

THE EQUIVALENCE RELATION AND THE RESPONSE

If the equivalence relation contains ordered pairs of all positive components of the reinforcement contingency, what about the response? The definition does not exclude responses from the pairs of elements that make up the equivalence relation. So far, however, we have used a single defined response (rsp1), which has to drop out of the equivalence relation if reinforcement is to create the four-term unit. A second crucial experiment is called for, as outlined in Figure 6. Here, instead of providing contingency-specific reinforcement, we keep the reinforcer constant (rf1) but require differential responding to the discriminative stimuli. In the presence of Comparison B1 or C1, Response

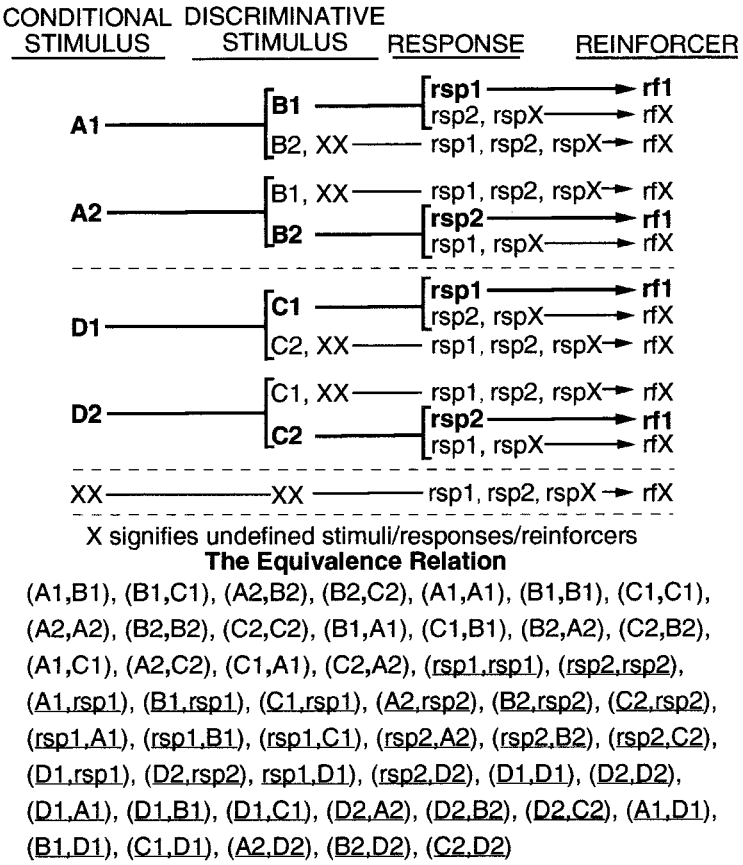

Fig. 6. Four-term contingencies (AB and DC conditional discriminations), with contingency-specific defined responses (rsp1 and rsp2). Underlining indicates the event pairs that the use of contingency-specific responses adds to the equivalence relations.

1 still leads to reinforcement, but in the presence of B2 or C2, Response 2 is now required.

Again, the two baseline conditional discriminations, AB and DC, have no conditional or discriminative stimuli in common. Nevertheless, these baseline contingencies should generate an equivalence relation that includes all of the listed emergent conditional discriminations. For example, it will include the same AC, DB, and AD event pairs that had been included before, even though none of those stimuli are related to each other via a common sample or comparison.

Response 1 is now a component of two contingencies, one including A1 and B1 and the other including D1 and C1. This common element brings all four stimuli along with it into the same class (class union). In a similar way, Response 2 brings A2, B2, C2, and D2 into another class. The equivalence relation thus comes to include all of the underlined event pairs. If all of these component pairs do not emerge, then again, the theory that equivalence comes directly from the reinforcement contingency will become untenable.

This experiment awaits doing. It is procedurally difficult and will take some real ingenuity to arrange tests for emergent conditional discriminations in which Response 1 or Response 2 serves as a sample or comparison. Even without such tests, however, the emergence of new conditional discriminations in which A and B stimuli are related to D and C stimuli seems to have no other tenable explanation than the common relation of those stimuli to defined responses.

In this instance, other theories may offer a different explanation, called *transfer of func-*

tion (e.g., Hayes, 1991, 1992, 1994). The function being transferred is the control of a specific response. The functional control of Response 1 by Stimuli B1 and C1 is said not only to bring about a relation between those stimuli but also to transfer to other stimuli that are related to B1 and C1, namely, A1 and D1, respectively. Similarly, the functional control of Response 2 is said to transfer to all stimuli that are related to B2 and C2.

The problem here is that transfer of function explains nothing. Function transfer is simply what we observe. Theorists who would appeal to transfer of function as an explanation that somehow goes beyond description would be assuming that the transfer of control from one stimulus to another does not itself require explanation. If they are adding a new theoretical process that has no utility except to account for transfer of function, then they are committing the logical fallacy of naming an observed phenomenon and then using the name as an explanation. Furthermore, such a theory would have to acknowledge explicitly that a failure to observe transfer would constitute evidence against the theory. Theories that appeal to transfer of function as an explanatory concept, however, have never specified the conditions under which transfer is and is not to be expected. That omission leaves the theories free to claim support from observations of function transfer and to ignore any failures to observe such transfer. (The validity of any failure to observe transfer would, of course, depend on its own procedural integrity; see below for additional clarification of this point.)

By contrast, the theory that the reinforcement contingencies here will create the depicted equivalence relation—that is to say, will generate the emergent conditional discriminations—is an acknowledged theory. It is also a most attractively simple and elegant theory in that it postulates no additional explanatory process. Perhaps more important is its empirical testability; it can be disproved.

DIFFERENTIAL RESPONSES *AND* DIFFERENTIAL REINFORCERS

It is possible, of course, to set up contingencies to require specific responses *and* reinforcers. Figure 7 illustrates this, in the context once more of the original AB and BC (rather than DC) conditional discriminations. Now, the events in Class 1 include both Response 1 and Reinforcer 1; Class 2 includes Response 2 and Reinforcer 2. With effective controls for the extra difficulty that teaching a second response introduces, the use of differential responses and reinforcers should greatly facilitate both the learning of baseline and the emergence of derived conditional discriminations. Without a common response and reinforcer to bring about a large equivalence class, which then has to break down before the analytic units can form, an initial conflict will no longer exist between the equivalence relation and the establishment of three- and four-term units. Many students who ordinarily take a long time to learn conditional discriminations, or who fail to learn, or who fail to show equivalence relations, should improve their performances. The theory that reinforcement contingencies generate the equivalence relation requires confirmation of that prediction also. Although some positive evidence exists (e.g., Lowenkron, 1984, 1989; McIlvane et al., 1992; Peterson, 1984; Reichmuth, 1997; Schenk, 1994; Trapold, 1970), the most definitive experiments, with contingency-specific reinforcers *and* responses, have yet to be done.

THREE-TERM CONTINGENCIES AND EQUIVALENCE

A simpler paradigm for testing whether responses and reinforcers are included in the equivalence relation is the three-term contingency. The theory that the reinforcement contingency generates the equivalence relation places no lower limit on the complexity of the contingency. Although such a limit may eventually prove to be necessary, extension of the theory to three-term operant contingencies has been well established, sparked by the work of de Rose and his colleagues (de Rose, McIlvane, Dube, Galpin, & Stoddard, 1988; de Rose, McIlvane, Dube, & Stoddard, 1988) and by Vaughan (1988). Also, Manabe, Kawashima, and Staddon (1995), Braga-Kenyon, Andrade, Ahern, and Sidman (2000),[1]

[1] Braga-Kenyon, P., Andrade, M., Ahearn, W. H., & Sidman, M. (2000). *Inclusion of defined responses in equivalence relations: A systematic replication of Manabe et al. (1995).* Manuscript submitted for publication.

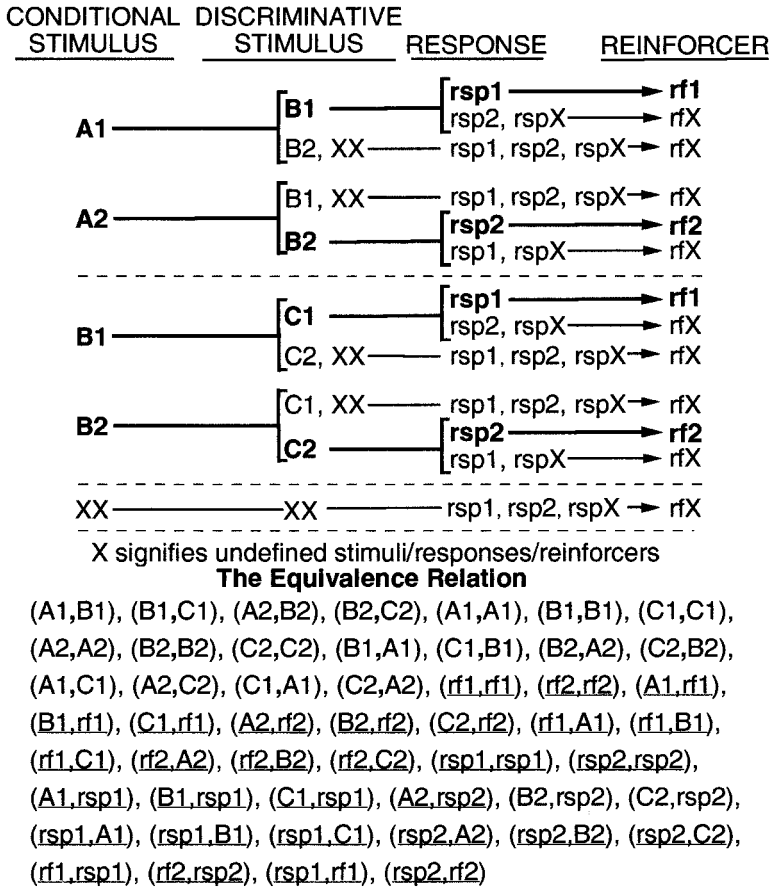

Fig. 7. Four-term contingencies (AB and BC conditional discriminations) with contingency-specific responses (rsp1 and rsp2) and reinforcers (rf1 and rf2). Underlining indicates the event pairs added to the equivalence relation by the use of both contingency-specific responses and reinforcers.

and Andrade, Braga-Kenyon, Ahern, and Sidman (1999)[2] have reported several experiments in which emergent performances seem to be explainable in no other way than by inclusion of defined responses in equivalence classes that three-term contingencies generate. By examining three-term contingencies more closely, we can help to make visible some additional implications of the theory that equivalence relations consist of pairs of all positive elements that are involved in reinforcement contingencies.

Each of the conditional discriminations we have been looking at includes one successive and two simultaneous simple discriminations. For example, in the context of Sample A1 or A2 (the presentation of A1 or A2 separately requires a successive discrimination between them), we see a simultaneous presentation of Comparisons B1 and B2; a defined response to only one of these will produce the defined reinforcer. This, of course, requires a simultaneous discrimination between B1 and B2; both are present at the same time. Figure 8, which isolates one of the simple discriminations that was involved in our four-term contingency, shows this three-term contingency. In the presence of B1, Response 1 will produce Reinforcer 1; in the presence of other stimuli, no response will produce the defined reinforcer.

Our theory tells us that even while the con-

[2] Andrade, M., Braga-Kenyon, P., Ahearn, W., & Sidman, M. (1999, May). *Equivalence classes and three-term contingencies.* Poster session presented at the annual meeting of the Association for Behavior Analysis, Chicago.

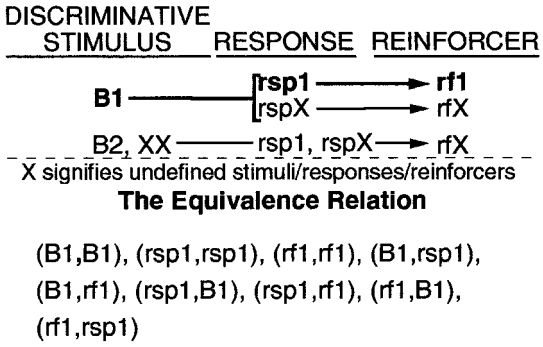

Fig. 8. A three-term contingency, and the resulting equivalence relation that can actually not be measured (see text).

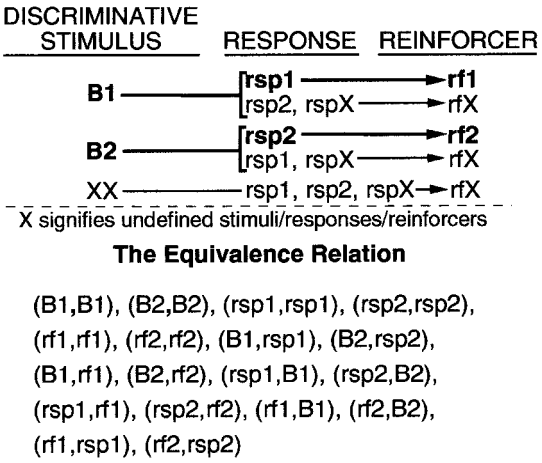

Fig. 9. One set of three-term contingencies with contingency-specific defined responses and reinforcers, and the event pairs that make up the resulting equivalence relation.

tingency establishes this three-term unit—a simple discrimination—Stimulus B1, Response 1, and Reinforcer 1 will become members of the same equivalence class. To establish the class requires no more than to set up the depicted contingency. In practice, however, none of the event pairs that are listed as members of the equivalence relation are actually demonstrable without some procedural changes. This is because the defined elements, B1, rsp1, and rf1, have no defined options. For example, in an identity-matching test for the B1B1 pair, what stimulus would serve as the incorrect comparison?

Figure 9 illustrates one way to solve this problem. The simple discrimination now involves contingency-specific responses and reinforcers. In the presence of Stimulus B1, Response 1 produces Reinforcer 1, and Response 2 produces no defined consequence. In the presence of B2, however, Response 2 produces Reinforcer 2, and Response 1 produces no defined consequence. Again, conditional discrimination tests are difficult to design when responses have to function as samples or comparisons, but the other element pairs in the equivalence relation can be tested relatively easily. No one has yet carried out such tests after having established only this relatively simple baseline. Given procedural integrity, their results will once more cause the theory to stand or fall.

Manabe et al. (1995), using budgerigars as subjects, introduced a technique that, although indirect, helps to get around an inherent difficulty in attempting to determine whether defined responses are equivalence class members. To verify that an equivalence class includes a response, one must show that the response and not its controlling stimulus is the essential element (Sidman, 1994, p. 377). Although some aspects of the Manabe et al. procedures require clarification, and additional controls might have made their conclusions more definitive (see, e.g., K. Saunders & Williams, 1998; Sidman, 1994, p. 471), a systematic replication by Braga-Kenyon et al. (2000),[1] with human subjects, confirmed the utility of their innovative procedure. The results obtained by Braga-Kenyon et al. supported the hypothesis that the event pairs making up an equivalence relation include the three-term contingency's defined responses. Figure 10 illustrates their technique, a slight modification of the Manabe et al. procedure.

In Phase 1, they taught their subjects a simple discrimination, placing Responses 1 and 2 under the discriminative control of Stimuli B1 and B2, respectively. Then, in Phase 2, came a test of whether the three-term contingency had generated an equivalence relation in which one class consisted of Stimulus B1 and Response 1 and the other consisted of Stimulus B2 and Response 2. The critical test had the subjects learning a conditional discrimination in which the discriminative stimuli from Phase 1 (B1 and B2) served as comparisons, with new stimuli (A1 and A2) serving as samples. The ingenious aspects of this procedure were (a) requiring a defined

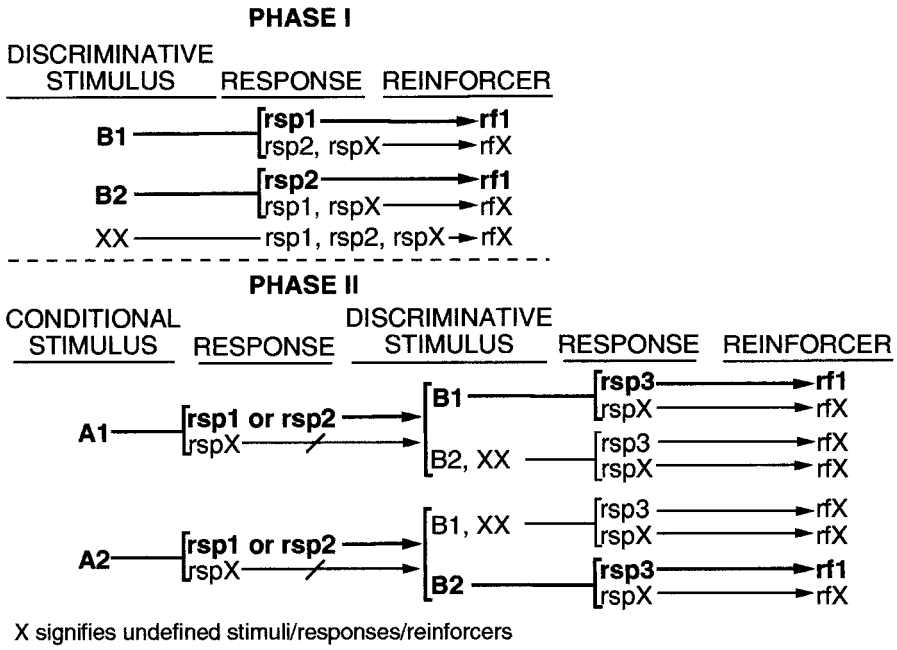

Fig. 10. The inclusion of defined responses in equivalence classes established by three-term contingencies (after Manabe et al., 1995). See text for details.

response to the sample before the comparisons could appear; and (b) leaving the defined response somewhat flexible—on any trial, regardless of the sample, either Response 1 or Response 2 (but no other) would produce the comparisons. Then, once the comparisons appeared, the subjects could produce the reinforcer not with Responses 1 or 2 but with a new response (Response 3). The main experimental question was whether each of the sample stimuli (A1 and A2) would come to control the same response that its related comparison (B1 or B2) had controlled in the previous simple discrimination.

Several of the human subjects (Braga-Kenyon et al., 2000[1]) came to respond consistently to the sample stimuli. On trials with A1 as the sample, they produced the comparisons by means of Response 1; with A2 as the sample, they typically emitted Response 2. Even though the contingencies did not require the subjects to respond differentially to Samples A1 and A2, they did so.

These Phase 2 results are essential if our theory is to survive. If equivalence arises directly from the reinforcement contingency, with the equivalence class consisting of ordered pairs of all positive elements that participate in the contingency, then the three-term contingency in Phase 1 must have established an equivalence relation that included the event pairs (B1, rsp1) and (B2, rsp2). Then, in Phase 2, the expanded contingency must have brought the event pairs (A1, B1) and (A2, B2) into an equivalence relation. With the common B stimuli bringing about class union, each response, along with its directly related B stimulus from Phase 1 and its indirectly related A stimulus from Phase 2, became members of expanded equivalence classes. Only if Responses 1 and 2 had become members of equivalence classes because of their involvement in three-term contingencies could we predict that those responses would come under the control of Stimuli A1 and A2.

Once again, to explain these results by appealing to transfer of function (transfer of control over the defined responses from the B to the A stimuli) would add nothing to the story except a postulated process that itself would need explanation. Furthermore, I have not yet seen any theorists admit that a failure to produce such transfer would negate their theory. By contrast, our theory holds that the observed transfer *had* to come about *because*

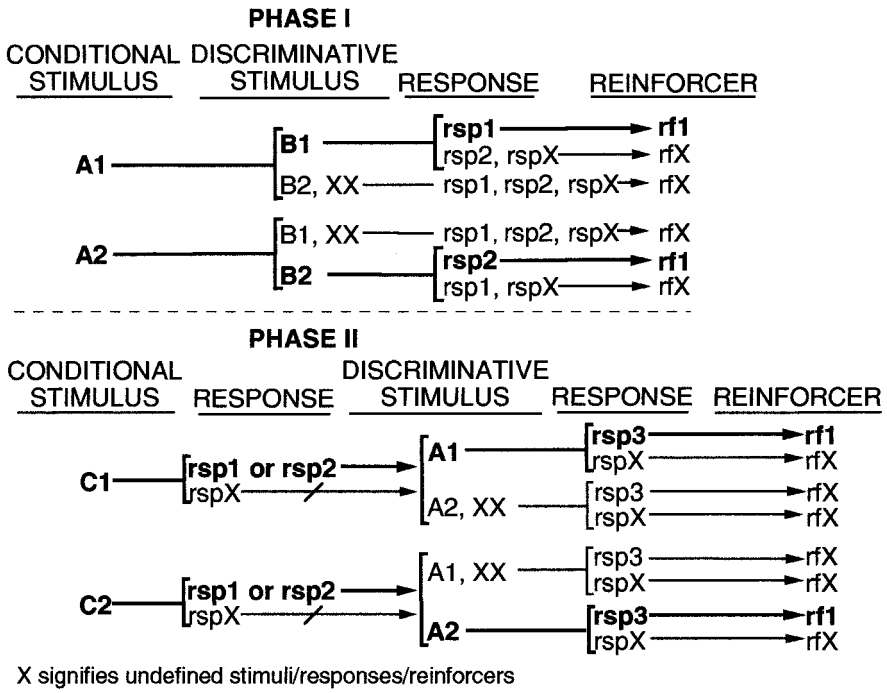

Fig. 11. The inclusion of defined responses in equivalence classes established by four-term contingencies.

three-term contingencies generate equivalence relations, with defined responses included in the equivalence classes along with the stimuli. Failure of transfer under the conditions of this experiment would have negated the theory that is being elucidated here.

The procedure that Figure 10 summarizes can be more generally useful to test for the inclusion of defined responses in equivalence classes. It provides a way around the problem, noted in conjunction with Figure 6, of how to arrange conditional discrimination tests in which responses have to serve as samples or comparisons. Although Phase 1 in Figure 10 used a simple discrimination with contingency-specific responses, it might just as well have used a conditional discrimination, as in the Phase 1 section of Figure 11. Then, in Phase 2, Stimuli A1 and A2 from Phase 1 would serve as comparisons; new stimuli, C1 and C2, would serve as samples. Again, a defined response to the sample is required on each Phase 2 trial before comparisons can appear, and the defined response can be either Response 1 or Response 2, regardless of the sample. Once more, we would expect to observe subjects responding differentially to the new samples, with each one coming to control the same response that its related A stimulus had controlled in Phase 1. This extension of the Manabe et al. (1995) procedure has yet to be carried out, but when it is, it will provide yet another opportunity to support or to disprove the theory under consideration.

More tests of the theory in the context of three-term contingencies become possible if we teach a subject additional simple discriminations. Figure 12 adds just one. Now, Stimuli B1 and C1 will become members of one class because both are involved in contingencies that include Response 1 and Reinforcer 1 as common elements. Stimuli B2 and C2 will become members of another class because they are components of contingencies that include Response 2 and Reinforcer 2. The equivalence relation will now include all of the element pairs that the C stimuli belong to. This prediction, too, which has not yet been tested, requires confirmation if the theory being proposed is to stand up.

The use of two or more simple discriminations opens up another way to find out whether three-term contingencies are suffi-

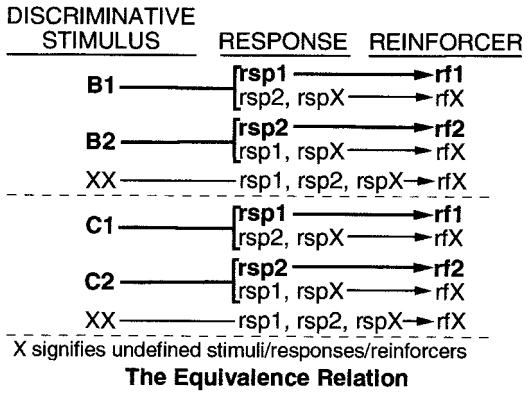

(B1,B1), (B2,B2), (C1,C1), (C2,C2), (rsp1,rsp1), (rsp2,rsp2), (rf1,rf1), (rf2,rf2), (B1,C1), (B2,C2), (C1,B1), (C2,B2), (B1,rsp1), (C1,rsp1), (B2,rsp2), (C2,rsp2), (B1,rf1), (C1,rf1), (B2,rf2), (C2,rf2), (rsp1,B1), (rsp1,C1), (rsp2,B2), (rsp2,C2), (rsp1,rf1), (rsp2,rf2), (rf1,B1), (rf1,C1), (rf2,B2), (rf2,C2), (rf1,rsp1), (rf2,rsp2)

Fig. 12. Two sets of three-term contingencies with contingency-specific defined responses and reinforcers, and the event pairs that make up the resulting equivalence relation.

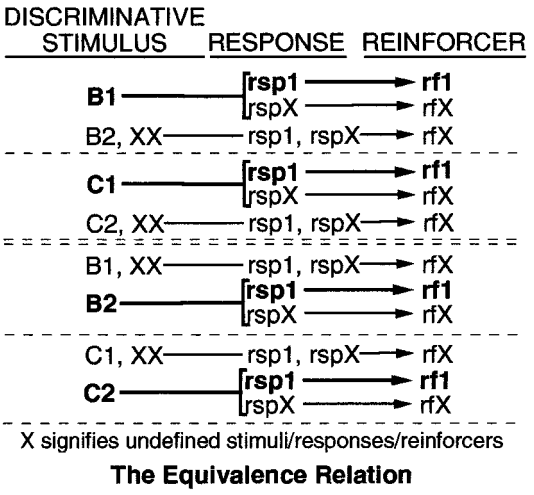

(B1,B1), (B2,B2), (C1,C1), (C2,C2), (B1,C1), (C1,B1), (B2,C2), (C2,B2)

Fig. 13. Three-term contingencies in a repeated reversal procedure, and the event pairs in the resulting equivalence relation. There are no contingency-specific responses or reinforcers.

cient to establish equivalence relations. This is the discrimination-reversal procedure that Vaughan pioneered with pigeons as subjects (Vaughan, 1988; see also Dube, Callahan, & McIlvane, 1993). Figure 13 illustrates a simplified version of Vaughan's procedure. The diagrams above the double dashed line illustrate the baseline contingencies that teach a subject to respond only in the presence of a set of positive stimuli, B1 and C1. Once the subject has learned that discrimination, Stimuli B1 and C1 are made negative, and the other stimuli, B2 and C2, become positive, as illustrated below the double dashed line. The discrimination continues to be reversed each time the subject learns to respond only to members of the current positive set (B1 and C1 or B2 and C2). The establishment of an equivalence class is suggested when the subject experiences a reversed contingency with only one of the newly positive stimuli, and then shifts responding immediately when next encountering the other member of that set.

Such a result, obtained by Vaughan (1988) with pigeons, was replicated and extended to sea lions by Reichmuth (1997) and to human subjects by Sidman, Wynne, Maguire, and Barnes (1989). As Vaughan indicated, this experiment brought equivalence classes and functional classes under the same rubric. We can now also see that its results are not only to be expected but are actually required if equivalence relations do come directly from reinforcement contingencies, including three-term contingencies.

Vaughan's (1988) original repeated reversal procedure did not permit any conclusions to be drawn with respect to the inclusion of defined responses or reinforcers in equivalence classes. Because all of the contingencies included Response 1 and Reinforcer 1, those elements had to drop out of the equivalence relation if subjects were to discriminate the B and C stimuli. Once the common response and reinforcer had dropped out, the event pairs listed below the diagrams in Figure 13 would have defined the equivalence relation. Both Reichmuth (1997) and Sidman et al. (1989) confirmed the emergence of those listed stimulus pairs that did not involve identity matching: (B1, C1), (C1, B1), (B2, C2), and (C2, B2).

Modifying the repeated discrimination reversal procedure by using contingency-specific defined responses and reinforcers would

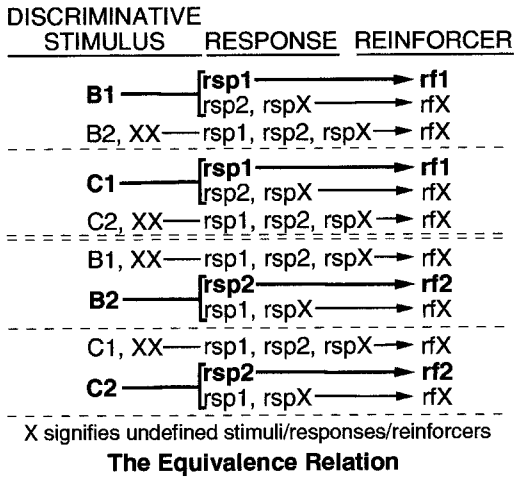

(B1,B1), (B2,B2), (C1,C1), (C2,C2), (B1,C1), (C1,B1), (B2,C2), (C2,B2), (rsp1,rsp1), (rsp2,rsp2), (rf1,rf1), (rf2,rf2), (B1,rsp1), (C1,rsp1), (B2,rsp2), (C2,rsp2), (B1,rf1), (C1,rf1), (B2,rf2), (C2,rf2), (rsp1,B1), (rsp1,C1), (rsp2,B2), (rsp2,C2), (rsp1,rf1), (rsp2,rf2), (rf1,B1), (rf1,C1), (rf2,B2), (rf2,C2), (rf1,rsp1), (rf2,rsp2)

Fig. 14. Three-term contingencies in a repeated reversal procedure with contingency-specific responses and reinforcers. Underlining indicates the event pairs added to the equivalence relation by the use of contingency-specific responses and reinforcers.

permit more extensive tests of our theory. Figure 14 illustrates such a modification. As before, the original contingencies (above the double dashed lines) set up B1 and C1 as positive discriminative stimuli; either one sets the occasion for Response 1 to produce Reinforcer 1. With the contingencies reversed (below the double dashed lines), B2 and C2 become positive; now, either of these stimuli sets the occasion for Response 2 to produce Reinforcer 2. One effect of using contingency-specific responses and reinforcers will be an enlargement of the equivalence relation. With appropriate testing, all 24 of the underlined event pairs in the list below the diagrams should emerge, in addition to the eight pairs that were to be expected before.

The use of differential responses and reinforcers should facilitate both the learning of the original three-term contingencies and the successive reversals. As with four-term contingencies, this facilitation should come about because without a common response and reinforcer to bring about an initial large equivalence class, no conflict would exist between the equivalence relation and the formation of the three-term units. This prediction has not yet been fully tested, but Reichmuth (1997) did find that the use of contingency-specific reinforcers facilitated learning of contingency reversals by sea lions.

Reichmuth (1997) also used the repeated discrimination-reversal procedure to find out whether the equivalence classes that three- and four-term contingencies give rise to include the reinforcers. She first used conditional discriminations, with contingency-specific reinforcers, to establish equivalence relations. Then, using entirely different stimuli, she set up two equivalence classes by means of the repeated reversal procedure illustrated in Figure 14 (but without requiring differential responses). Then, she added stimuli from the conditional discriminations to the two sets of stimuli in the simple discrimination-reversal procedure, maintaining the contingency-specific reinforcers. The new stimuli took their places in the classes that the reversal procedure had established, even though they had been related to the stimuli in those classes in no way except through their shared reinforcement contingencies.

No other current theory that might claim to accommodate such findings has been put forth in a way that makes them crucial. If stimuli that had been unrelated except for shared reinforcers had failed to transfer from classes established by means of conditional discriminations to classes established by means of simple discrimination reversals, other theories would have considered such a failure to be without significance. That is to say, no other theorists would have paid attention to negative results. By contrast, the theory that a reinforcement contingency gives rise directly to an equivalence relation, with the relation consisting of all possible pairs of events that the contingency specifies (including reinforcers and responses), not only predicts the findings noted above without needing any theoretical modifications or additions but also requires those findings as necessary for its survival.

SOME FINAL GENERALITIES

To help make it evident that the rather prosaic theory that equivalence arises directly

from reinforcement contingencies is productive, I have outlined many of the experiments that the theory generates. Some of the most exciting of those experiments have been done, with results that support the theory, but many remain to be performed.

Every theory, of course, has gray areas that must eventually be looked into. The theory under consideration here is no exception. For example, how do we deal with those instances in which a reinforcement contingency fails to generate an equivalence relation? First, of course, procedural factors in the relevant experiments must be ruled out (e.g., Carrigan & Sidman, 1992; Harrison & Green, 1990; Johnson & Sidman, 1993; Kelly, Green, & Sidman, 1998; Sidman, 1994, pp. 259–263, 406–414, 511–512, 524–525; Stikeleather & Sidman, 1990). That is to say, the experiments must be procedurally valid. Second, other variables, not specified in the description of the reinforcement contingency itself—for example, reinforcement and stimulus control variables, or neurological variables—are highly likely to be relevant. Explicating their relevance will increase the theory's breadth without discrediting it.

Third, members of some species may not show equivalence relations even when operant reinforcement contingencies do produce three- and four-term units of analysis. (It must be noted, however, that so far, there has been no definitive demonstration that any species sensitive to reinforcement contingencies is incapable of equivalence relations.) Variability may also exist within a species, including the human, when factors like developmental retardation, acquired brain damage, sensory deficiencies, or genetic abnormalities may be found to bear on the production of equivalence relations by reinforcement contingencies (e.g., Devany, Hayes, & Nelson, 1986; Green, 1990; Sidman, 1994, pp. 266–271). As formulated, however, the present theory is neutral with respect to the relevance of neurological structure and function, genetic factors, or developmental processes. Those studies that have shown equivalence in some nonhumans (Reichmuth, 1997; Schusterman & Kastak, 1993, 1998) or can be interpreted as having done so (e.g., Manabe et al., 1995; Schusterman, Reichmuth, & Kastak, 2000; Urcuioli & DeMarse, 1997; Vaughan, 1988; Zentall, 1998; Zentall & Urcuioli, 1993) are sufficient to fulfill the demands of the theory. If a demonstration is forthcoming, however, that a particular species is incapable of equivalence relations even though it is sensitive to reinforcement contingencies, such a demonstration will not require abandonment of the theory offered here. To set limiting conditions will not negate the theory that equivalence relations arise from reinforcement contingencies. Instead, the identification of such limits will establish opportunities for research to identify their sources. Accurate prediction of which nonhumans—or even humans—can and cannot show equivalence relations, far from diminishing the theory, will increase its breadth. Indeed, such prediction is likely to require theoretical considerations and empirical support that only sciences other than behavior analysis can provide.

In addition to the specific experiments that it generates, the theory also gives rise to a way of looking at equivalence relations that differs somewhat from our usual conceptualizations of operant conditioning. For example, by including defined responses in the equivalence classes that a contingency generates, we remove the distinction between stimuli and responses when considering classes (Sidman, 1994, pp. 384–386). The unidirectional arrows of time and causality, which are so important when we are talking about conditioning, are not relevant to relations between class members. This gives rise to the ''bag'' analogy (Sidman, 1994, p. 381): An equivalence relation can be thought of as a bag that contains ordered pairs of all events that the contingency specifies; the bag can be shaken and the elements mixed without regard to any spatial or temporal relations among them. To document the relation, all we have to do is reach into the bag and pull out its member pairs.

One consequence of this analogy is that we have to look critically at the notion that structural or linear-associative variables can differentiate the members of equivalence classes. One such variable is ''directionality'' or ''sample as node versus comparison as node'' (see R. Saunders & Green, 1999, for a review of this issue). Another has been called ''nodal distance'' (Fields, Adams, & Verhave, 1993), or the least number of nodes that must be involved for a particular stimulus pair in a set of conditional discriminations to be included

in an equivalence relation. As I have pointed out elsewhere, however (Sidman, 1994, p. 543), the notion that members of a class differ from each other with respect to the criterion for class membership contradicts the very concept of classes. I therefore suggested experimental tests of certain procedural variables that might change our interpretations of the relevant experiments (Sidman, 1994, pp. 273–279, 525–528, 537–549). R. Saunders and Green also have suggested a number of procedural factors that might account for the results of experiments that have given rise to notions of directionality and nodal distance. Once again, methodology rears its ugly head, raising questions that have priority over theory.

One more issue: Is naming a critical determiner of the emergent performances that define equivalence relations (Dugdale & Lowe, 1990; Horne & Lowe, 1996)? Inclusion of the defined response component of the contingency in the equivalence class should somewhat defuse the naming controversy. Any name we apply to stimuli is a defined discriminative response. Our theory states explicitly that any defined response components of the contingencies have a status that is equal in every way to the stimulus and reinforcer members of the classes. Although just as important, responses require no separate treatment. I think this provides a simple but satisfactory resolution to the naming controversy.

In brief summary, then, equivalence relations require no new concepts beyond the notion that the reinforcement contingency establishes them in addition to the familiar analytic units, and that equivalence relations consist of ordered pairs of all positive elements that participate in the contingency. That notion, however simple it may seem, gives rise to some new ways of thinking about behavior. Perhaps more important are the new experiments it leads to—experiments that, up to this time, no other theory has motivated. Although the war of words is likely to continue, with other theories being adapted to unpredicted outcomes (Clayton & Hayes, 1999), the very simplicity of the theory being explicated here makes each of the suggested experiments crucial. This conception of equivalence relations cannot ignore failures to observe the predicted results.

REFERENCES

Carrigan, P. F., Jr., & Sidman, M. (1992). Conditional discrimination and equivalence relations: A theoretical analysis of control by negative stimuli. *Journal of the Experimental Analysis of Behavior, 58,* 183–204.

Clayton, M. C., & Hayes, L. J. (1999). Conceptual differences in the analysis of stimulus equivalence. *The Psychological Record, 49,* 145–161.

Cumming, W. W., & Berryman, R. (1965). The complex discriminated operant: Studies of matching-to-sample and related problems. In D. I. Mostofsky (Ed.), *Stimulus generalization* (pp. 284–330). Stanford, CA: Stanford University Press.

de Rose, J. C., McIlvane, W. J., Dube, W. V., Galpin, V. C., & Stoddard, L. T. (1988). Emergent simple discrimination established by indirect relation to differential consequences. *Journal of the Experimental Analysis of Behavior, 50,* 1–20.

de Rose, J. C., McIlvane, W. J., Dube, W. V., & Stoddard, L. T. (1988). Stimulus class formation and functional equivalence in moderately retarded individuals' conditional discrimination. *Behavioural Processes, 17,* 167–175.

Devany, J. M., Hayes, S. C., & Nelson, R. O. (1986). Equivalence class formation in language-able and language-disabled children. *Journal of the Experimental Analysis of Behavior, 46,* 243–257.

Dube, W. V., Callahan, T. D., & McIlvane, W. J. (1993). Serial reversals of concurrent auditory discriminations in rats. *The Psychological Record, 43,* 429–440.

Dube, W. V., & McIlvane, W. J. (1995). Stimulus-reinforcer relations and emergent matching to sample. *The Psychological Record, 45,* 591–612.

Dube, W. V., McIlvane, W. J., Mackay, H. A., & Stoddard, L. T. (1987). Stimulus class membership established via stimulus-reinforcer relations. *Journal of the Experimental Analysis of Behavior, 47,* 159–175.

Dube, W. V., McIlvane, W. J., Maguire, R. W., Mackay, H. A., & Stoddard, L. T. (1989). Stimulus class formation and stimulus-reinforcer relations. *Journal of the Experimental Analysis of Behavior, 51,* 65–76.

Dugdale, N. A., & Lowe, C. F. (1990). Naming and stimulus equivalence. In D. E. Blackman & H. Lejeune (Eds.), *Behaviour analysis in theory and practice: Contributions and controversies* (pp. 115–138). Hove, England: Erlbaum.

Fields, L., Adams, B. J., & Verhave, T. (1993). The effects of equivalence class structure on test performances. *The Psychological Record, 43,* 697–712.

Goldiamond, I. (1975). Alternative sets as a framework for behavioral formulations and research. *Behaviorism, 3,* 49–86.

Goldiamond, I. (1982). Training parent trainers and ethicists in nonlinear analysis of behavior. In R. F. Dangel & R. A. Polster (Eds.), *Parent training: Foundations of research and practice* (pp. 504–546). New York: Guilford Press.

Green, G. (1990). Differences in development of visual and auditory-visual equivalence relations. *American Journal on Mental Retardation, 95,* 260–270.

Green, G., & Saunders, R. R. (1998). Stimulus equivalence. In K. A. Lattal & M. Perone (Eds.), *Handbook of research methods in human operant behavior* (pp. 229–262). New York: Plenum.

Harrison, R. J., & Green, G. (1990). Development of

conditional and equivalence relations without differential consequences. *Journal of the Experimental Analysis of Behavior, 54,* 225–237.

Hayes, S. C. (1991). A relational control theory of stimulus equivalence. In L. J. Hayes & P. N. Chase (Eds.), *Dialogues on verbal behavior* (pp. 19–40). Reno, NV: Context Press.

Hayes, S. C. (1992). Verbal relations, time, and suicide. In S. C. Hayes & L. J. Hayes (Eds.), *Understanding verbal relations* (pp. 109–118). Reno, NV: Context Press.

Hayes, S. C. (1994). Relational frame theory: A functional approach to verbal events. In S. C. Hayes, L. J. Hayes, M. Sato, & K. Ono (Eds.), *Behavior analysis of language and cognition* (pp. 9–30). Reno, NV: Context Press.

Horne, P. J., & Lowe, C. F. (1996). On the origins of naming and other symbolic behavior. *Journal of the Experimental Analysis of Behavior, 65,* 185–241.

Johnson, C., & Sidman, M. (1993). Conditional discrimination and equivalence relations: Control by negative stimuli. *Journal of the Experimental Analysis of Behavior, 59,* 333–347.

Kelly, S., Green, G., & Sidman, M. (1998). Visual identity matching and auditory-visual matching: A procedural note. *Journal of Applied Behavior Analysis, 31,* 237–243.

Lowenkron, B. (1984). Coding responses and the generalization of matching to sample in children. *Journal of the Experimental Analysis of Behavior, 42,* 1–18.

Lowenkron, B. (1989). Instructional control of generalized relational matching to sample in children. *Journal of the Experimental Analysis of Behavior, 52,* 293–309.

Manabe, K., Kawashima, T., & Staddon, J. E. R. (1995). Differential vocalization in budgerigars: Towards an experimental analysis of naming. *Journal of the Experimental Analysis of Behavior, 63,* 111–126.

McIlvane, W. J., Dube, W. V., Kledaras, J. B., de Rose, J. C., & Stoddard, L. T. (1992). Stimulus-reinforcer relations and conditional discrimination. In S. C. Hayes & L. J. Hayes (Eds.), *Understanding verbal relations* (pp. 43–67). Reno, NV: Context Press.

Peterson, G. B. (1984). How expectancies guide behavior. In H. L. Roitblat, T. G. Bever, & H. S. Terrace (Eds.), *Animal cognition* (pp. 135–148). Hillsdale, NJ: Erlbaum.

Reichmuth, C. J. (1997). *Functional classes and equivalence relations in California sea lions.* Unpublished masters thesis, University of California Santa Cruz.

Saunders, K. J., & Williams, D. C. (1998). Do parakeets exhibit derived stimulus control? Some thoughts on experimental control procedures. *Journal of the Experimental Analysis of Behavior, 70,* 321–324.

Saunders, R. R., & Green, G. (1999). A discrimination analysis of training-structure effects on stimulus equivalence outcomes. *Journal of the Experimental Analysis of Behavior, 72,* 117–137.

Schenk, J. J. (1994). Emergent relations of equivalence generated by outcome-specific consequences in conditional discrimination. *The Psychological Record, 44,* 537–558.

Schusterman, R. J., & Kastak, D. (1993). A California sea lion (*Zalophus californianus*) is capable of forming equivalence relations. *The Psychological Record, 43,* 823–839.

Schusterman, R. J., & Kastak, D. (1998). Functional equivalence in a California sea lion: Relevance to animal social and communicative interactions. *Animal Behaviour, 55,* 1087–1095.

Schusterman, R. J., Reichmuth, C. J., & Kastak, D. (2000). How animals classify friends and foes. *Current Directions in Psychological Science, 9,* 1–6.

Sidman, M. (1986). Functional analysis of emergent verbal classes. In T. Thompson & M. D. Zeiler (Eds.), *Analysis and integration of behavioral units* (pp. 213–245). Hillsdale, NJ: Erlbaum.

Sidman, M. (1987). Two choices are not enough. *Behavior Analysis, 22,* 11–18.

Sidman, M. (1990). Equivalence relations: Where do they come from? In D. E. Blackman & H. Lejeune (Eds.), *Behaviour analysis in theory and practice: Contributions and controversies* (pp. 93–114). Hillsdale, NJ: Erlbaum.

Sidman, M. (1994). *Equivalence relations and behavior: A research story.* Boston: Authors Cooperative.

Sidman, M. (1997a). Equivalence relations. *Journal of the Experimental Analysis of Behavior, 68,* 258–266.

Sidman, M. (1997b). Equivalence: A theoretical or a descriptive model? *Mexican Journal of Behavior Analysis, 23,* 125–145.

Sidman, M., Rauzin, R., Lazar, R., Cunningham, S., Tailby, W., & Carrigan, P. (1982). A search for symmetry in the conditional discriminations of rhesus monkeys, baboons, and children. *Journal of the Experimental Analysis of Behavior, 37,* 23–44.

Sidman, M., & Tailby, W. (1982). Conditional discrimination vs. matching to sample: An expansion of the testing paradigm. *Journal of the Experimental Analysis of Behavior, 37,* 5–22.

Sidman, M., Wynne, C. K., Maguire, R. W., & Barnes, T. (1989). Functional classes and equivalence relations. *Journal of the Experimental Analysis of Behavior, 52,* 261–274.

Skinner, B. F. (1938). *The behavior of organisms: An experimental analysis.* New York: Appleton-Century-Crofts.

Skinner, B. F. (1953). *Science and human behavior.* New York: Macmillan.

Stikeleather, G., & Sidman, M. (1990). An instance of spurious equivalence relations. *The Analysis of Verbal Behavior, 8,* 1–11.

Trapold, M. A. (1970). Are expectancies based upon different positive reinforcing events discriminably different? *Learning and Motivation, 1,* 129–140.

Urcuioli, P. J., & DeMarse, T. (1997). Some further tests of response-outcome associations in differential outcome matching-to-sample. *Journal of Experimental Psychology: Animal Behavior Processes, 23,* 171–182.

Vaughan, W., Jr. (1988). Formation of equivalence sets in pigeons. *Journal of Experimental Psychology: Animal Behavior Processes, 14,* 36–42.

Zentall, T. R. (1998). Symbolic representation in pigeons: Emergent stimulus relations in conditional discrimination learning. *Animal Learning & Behavior, 26,* 363–377.

Zentall, T. R., & Urcuioli, P. J. (1993). Emergent relations in the formation of stimulus classes by pigeons. *The Psychological Record, 43,* 795–810.

Received November 12, 1999
Final acceptance April 27, 2000